CE Ex ATEX IECEx KCs

CONNEC CABLE GLAND











CONNEC (주)콘넥 CO.,LTD.

CONNEC CABLE GLAND
CONNEC (주)콘넥

Company profile

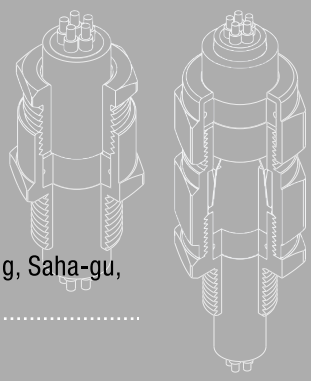

1992	02	Established Se-Kwang and Located at 869-1, Jangrim 1-dong, Saha-gu, Busan, Korea
2004	10	Changed Name To "CONNEC ELECTRIC"
2005	03	Acquirement Of Korean Industrial Standards KS C 8459 (Class 1 Flexible Metal Conduit Covered With PVC) Certification
2007	08	Patent Registration No.10_0753160
2009	01	Design Patent Registration No.30-0518758
	07	Acquirement Of QMS-3085 KS Q ISO 9001: 2009 / ISO 9001: 2008 Certification
2010	01	Patent Registration No.10-0937192 Patent Registration No.10-0937194
	08	Completion Of New Factory (2nd Factory) Located at 24, Hasinjungang-ro, 3beon-gil, Saha-gu, Busan, Korea
2012	06	Design Patent Registration No 30-061290
2013	08	Venture Business Registration
2014	07	Conversion Of Corporate To "CONNEC Co., Ltd."
	08	Selected As a Promising SME by IBK Bank of Korea
	10	Extension Of The Second Factory
2015	01	Acquirement Of Safety certification (Union Coupling, Flexible Coupling)
	02	Acquirement Of IECEx certification (Stopping Plug)
	06	Acquirement Of Safety certification (Packing Type Cable Gland)
2016	07	Design Registration No.30-0864652
	07	Acquirement Of IECEx certification (Non Armoured Cable Gland)
	10	Acquirement Of ATEX certification (Stopping Plug)
2017	05	Acquirement Of IECEx certification (Armoured Cable Gland)
	10	Acquirement Of ATEX certification (Armoured Cable Gland, Non Armoured Cable Gland)

CONNEC

Tel. 051-264-3538 Fax. 051-261-9138 www.connec.kr

1. About us 02P
2. Contents 03P
3. Certificate ..... 04P~05P
4. Assembly view 06P

Contents

EX type Cable Gland



5. Non Armoured Cable Gland ..... A2F 08P
6. Non Armoured Cable Gland(Double compression) ..... A2DF 09P
7. Non Armoured Cable Gland(Male & Female Type) ..... A2FF 10P
8. Wire Braid Armoured Cable Gland ..... E1F(X) 11P
9. Single Wire Armoured Cable Gland ..... E1F(W) 12P
10. Stopping Plug ..... SP 13P
11. Adapter & Reducer ..... Ad & Re ..... 14P~15P
12. Packing Type Cable Gland ..... PC 16P
13. Flexible Coupling ..... EF 17P
14. Union Coupling ..... EU 18P
15. Non Armoured Cable Gland ..... A2FK 19P
16. Wire Braid Armoured Cable Gland ..... E1FK(X) 20P
17. Single Wire Armoured Cable Gland ..... E1FK(W) 21P

Normal type Cable Gland

18. Non Armoured Cable Gland ..... A2FK-U 23P
19. Any Type of Armoured Cable Gland ..... E1FK-U 24P
20. JIS Type Cable Gland ..... CG 25P
21. NG Cable Gland ..... NG 26P
22. PGM Type Cable Gland ..... PGM 27P
23. Welding Type Cable Gland ..... WD 28P
24. DIN Type Cable Gland ..... DIN 29P
25. ML Type Cable Gland ..... ML 30P
26. ML Type Cable Gland(Polyamide) ..... ML(P) 31P
27. Armoured Cable Gland(Single compression) ..... CW 32P
28. Flexible Connect Cable Gland ..... A2F(EF) 33P
29. Flexible Connect Cable Gland ..... A2F(SG) 34P



Fitting & Accessory

31. SG & PG Connector, Elbow, Short Nipple, Coupling ..... 36P~38P
32. Shroud, Earth Tag, Gasket, Lock Nut, Serrated Washer, Plug, Breather Drain ..... 39P~41P

Junction Box

33. Small Type Junction Box ..... 43P~44P
34. Stainless Steel Junction Box 45P
35. GRP Junction Box 46P
36. Aluminum Junction Box 47P

Technical Information

..... 49P~55P

Tel.+82-51-264-3538 Fax.+82-51-261-9138 www.connec.kr

Certificate



















Quality management & Technical innovation!



















Tel.+82-51-264-3538 Fax.+82-51-261-9138 www.connec.kr

Fitting instruction for installation - A2F / E1F Cable gland

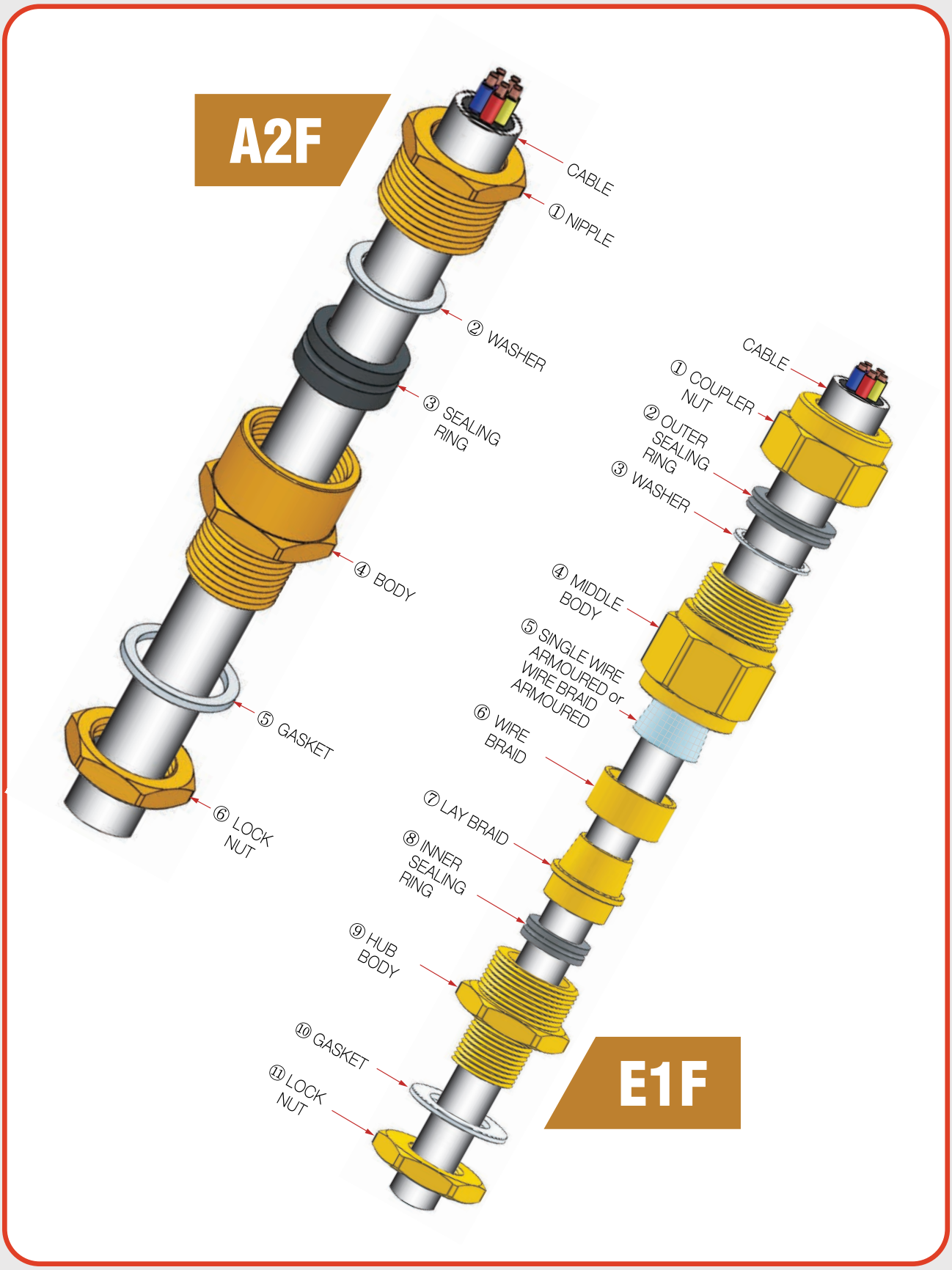

Tel. 051-264-3538 Fax. 051-261-9138 www.connec.kr

EX CABLE GLAND

Non armoured cable gland
A2F / A2DF / A2FF / A2FK / Packing type cable gland

Armoured cable gland
E1F(X) / E1F(W) / E1FK(X) / E1FK(W)

Stopping Plug / Adapter / Reducer /
EX-Flexible fittings / EX-Union coupling

Tel. +82-51-264-3538 Fax. +82-51-261-9138 www.connec.kr

A2F

Non armoured cable gland

CE Ex ATEX



1 Design specification
BS 6121, IEC 62444, EN 50262

2 Application
For use with all types of unarmoured and braided cable for Zone1 & Zone2 in hazardous area. Single compression for jacket of cable.

3 Certification
IECEx KGS (IECEx KGS 16.0004X)
ATEX DEKRA (17ATEX0093X)

4 Type protection
II2G Ex db IIC Gb / Ex eb IIC Gb / II2D Ex tb IIIC Db / IP66/67
The service temperature range is -60℃ to +120℃

5 Material
Brass, Brass with Nickel Plated(Standard), Stainless Steel

6 Accessories
Lock Nut, Gasket, Earth Tag, Shroud, Serrated Washer

7 How to order

CN-A2F / 20b / NPT1/2"
Gland type | Size | Entry thread size

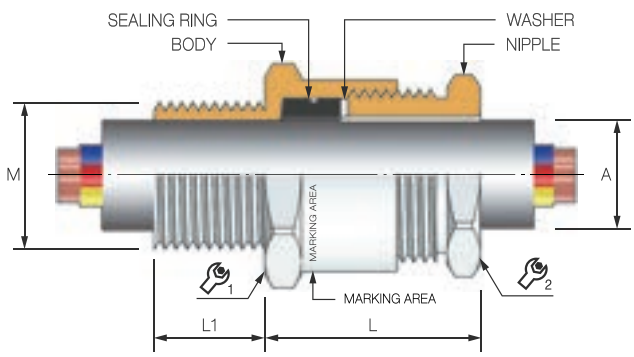

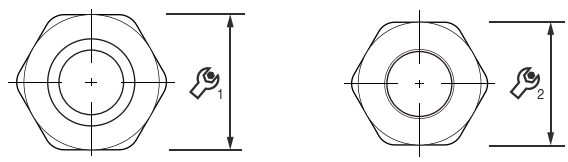

※ The length of the thread can be changed on required.

CN-A2F Type / Size	Entry thread size (M)		Cable Range(A)	Thread length (L1)			W_1	W_2	L
	Metric	NPT , PF		Metric	NPT	PF			
A2F-16a	M16 / M20	3/8“ / 1/2”	4 ~ 8	15	13 / 15	13 / 17	22	19	20
A2F-16b	M16 / M20	3/8“ / 1/2”	7 ~ 10	15	13 / 15	13 / 17	22	19	20
A2F-20a	M20 / M25	1/2“ / 3/4”	9 ~ 13	15	15 / 16	17 / 17	27	24	21
A2F-20b	M20 / M25	1/2“ / 3/4”	12 ~ 15	15	15 / 16	17 / 17	27	24	21
A2F-25a	M25 / M32	3/4“ / 1”	14 ~ 18	15	16 / 18	17 / 22	32	28	25
A2F-25b	M25 / M32	3/4“ / 1”	17 ~ 20	15	16 / 18	17 / 22	32	28	25
A2F-32a	M32 / M40	1“ / 1-1/4”	18 ~ 23	15	18 / 19	22 / 22	39	34	26
A2F-32b	M32 / M40	1“ / 1-1/4”	22 ~ 26	15	18 / 19	22 / 22	39	34	26
A2F-40a	M40 / M50	1-1/4“ / 1-1/2”	24 ~ 29	15	19 / 19	22 / 22	48	42	28
A2F-40b	M40 / M50	1-1/4“ / 1-1/2”	28 ~32.5	15	19 / 19	22 / 22	48	42	28
A2F-50a	M50 / M63	1-1/2“ / 2”	31 ~ 37	15	19 / 20	22 / 23	58	53	30
A2F-50b	M50 / M63	1-1/2“ / 2”	36 ~ 41	15	19 / 20	22 / 23	58	53	30
A2F-63a	M63/ M75	2“ / 2-1/2”	41 ~ 46	15	20 / 27	23 / 23	73	65	31
A2F-63b	M63/ M75	2“ / 2-1/2”	45 ~ 50	15	20 / 27	23 / 23	73	65	31
A2F-63c	M63/ M75	2-1/2”	49 ~ 54.5	15	27	23	73	65	31
A2F-75a	M75 / M90	2-1/2“ / 3”	53 ~ 59	15	27 / 28	23 / 27	85	78	36
A2F-75b	M75 / M90	2-1/2“ / 3”	58 ~ 63	15	27 / 28	23 / 27	85	78	36
A2F-75c	M75 / M90	2-1/2“ / 3”	62 ~ 66.5	15	27 / 28	23 / 27	85	78	36
A2F-90a	M90 / M100	3“ / 3-1/2”	64 ~ 69	20	28 / 30	27 / 28	100	92	38
A2F-90b	M90 / M100	3“ / 3-1/2”	68 ~ 73	20	28 / 30	27 / 28	100	92	38
A2F-90c	M90 / M100	3“ / 3-1/2”	72 ~ 77	20	28 / 30	27 / 28	100	92	38
A2F-100a	M100	3-1/2“ / 4”	76 ~ 81	20	30 / 31	28 / 28	112	104	40
A2F-100b	M100	3-1/2“ / 4”	80 ~ 85	20	30 / 31	28 / 28	112	104	40
A2F-100c	M100	3-1/2“ / 4”	84 ~ 89	20	30 / 31	28 / 28	112	104	40

Tel. 051-264-3538 Fax. 051-261-9138 www.connec.kr

A2DF

Non armoured cable gland

CE Ex ATEX



1 Design specification
BS 6121, IEC 62444, EN 50262

2 Application
For use with all types of unarmoured and braided cable for Zone1 & Zone2 in hazardous area.
Double compression for jacket of cable.

3 Certification
IECEx KGS (IECEx KGS 16.0004X)
ATEX DEKRA (17ATEX0093X)

4 Type protection
II2G Ex db IIC Gb / Ex eb IIC Gb / II2D Ex tb IIIC Db / IP66/67
The service temperature range is -60℃ to +120℃

5 Material
Brass, Brass with Nickel Plated(Standard), Stainless Steel

6 Accessories
Lock Nut, Gasket, Earth Tag, Shroud, Serrated Washer

7 How to order

CN-A2DF / 20b / M20
Gland type | Size | Entry thread size

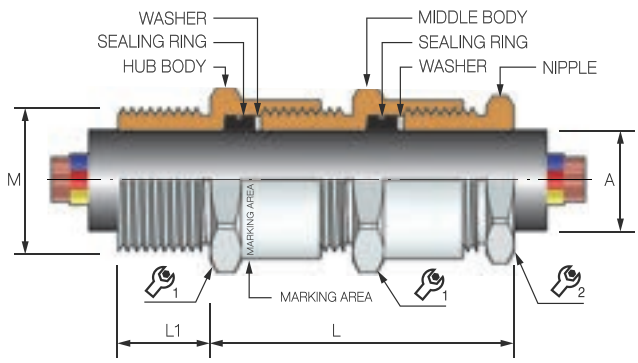

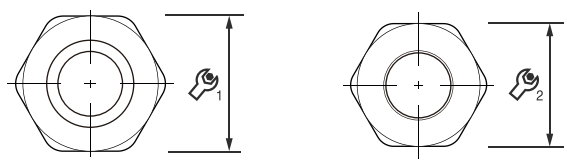

※ The length of the thread can be changed on required.

CN-A2DF Type / Size	Entry thread size (M)		Cable Range(A)	Thread length (L1)			W_1	W_2	L
	Metric	NPT , PF		Metric	NPT	PF			
A2DF-16a	M16 / M20	3/8" / 1/2"	4 ~ 8	15	13 / 15	13 / 17	22	19	40
A2DF-16b	M16 / M20	3/8" / 1/2"	7 ~ 10	15	13 / 15	13 / 17	22	19	40
A2DF-20a	M20 / M25	1/2" / 3/4"	9 ~ 13	15	15 / 16	17 / 17	27	24	41
A2DF-20b	M20 / M25	1/2" / 3/4"	12 ~ 15	15	15 / 16	17 / 17	27	24	41
A2DF-25a	M25 / M32	3/4" / 1"	14 ~ 18	15	16 / 18	17 / 22	32	28	48
A2DF-25b	M25 / M32	3/4" / 1"	17 ~ 20	15	16 / 18	17 / 22	32	28	48
A2DF-32a	M32 / M40	1" / 1-1/4"	18 ~ 23	15	18 / 19	22 / 22	39	34	53
A2DF-32b	M32 / M40	1" / 1-1/4"	22 ~ 26	15	18 / 19	22 / 22	39	34	53
A2DF-40a	M40 / M50	1-1/4" / 1-1/2"	24 ~ 29	15	19 / 19	22 / 22	48	42	55
A2DF-40b	M40 / M50	1-1/4" / 1-1/2"	28 ~32.5	15	19 / 19	22 / 22	48	42	55
A2DF-50a	M50 / M63	1-1/2" / 2"	31 ~ 37	15	19 / 20	22 / 23	58	53	60
A2DF-50b	M50 / M63	1-1/2" / 2"	36 ~ 41	15	19 / 20	22 / 23	58	53	60
A2DF-63a	M63/ M75	2" / 2-1/2"	41 ~ 46	15	20 / 27	23 / 23	73	65	62
A2DF-63b	M63/ M75	2" / 2-1/2"	45 ~ 50	15	20 / 27	23 / 23	73	65	62
A2DF-63c	M63/ M75	2-1/2"	49 ~ 54.5	15	27	23	73	65	62
A2DF-75a	M75 / M90	2-1/2" / 3"	53 ~ 59	15	27 / 28	23 / 27	85	78	70
A2DF-75b	M75 / M90	2-1/2" / 3"	58 ~ 63	15	27 / 28	23 / 27	85	78	70
A2DF-75c	M75 / M90	2-1/2" / 3"	62 ~ 66.5	15	27 / 28	23 / 27	85	78	70
A2DF-90a	M90 / M100	3" / 3-1/2"	64 ~ 69	20	28 / 30	27 / 28	100	92	73
A2DF-90b	M90 / M100	3" / 3-1/2"	68 ~ 73	20	28 / 30	27 / 28	100	92	73
A2DF-90c	M90 / M100	3" / 3-1/2"	72 ~ 77	20	28 / 30	27 / 28	100	92	73
A2DF-100a	M100	3-1/2" / 4"	76 ~ 81	20	30 / 31	28 / 28	112	104	75
A2DF-100b	M100	3-1/2" / 4"	80 ~ 85	20	30 / 31	28 / 28	112	104	75
A2DF-100c	M100	3-1/2" / 4"	84 ~ 89	20	30 / 31	28 / 28	112	104	75

Tel. +82-51-264-3538 Fax. +82-51-261-9138 www.connec.kr

A2FF

Non armoured cable gland

CE Ex ATEX



1 Design specification
BS 6121, IEC 62444, EN 50262

2 Application
For use with all types of unarmoured and braided cable for Zone1 & Zone2 in hazardous area. Can be used by connecting conduit tube. Single compression for jacket of cable.

3 Certification
IECEx KGS (IECEx KGS 16.0004X)
ATEX DEKRA (17ATEX0093X)

4 Type protection
II2G Ex db IIC Gb / Ex eb IIC Gb / II2D Ex tb IIIC Db / IP66/67
The service temperature range is -60℃ to +120℃

5 Material
Brass, Brass with Nickel Plated(Standard), Stainless Steel

6 Accessories
Lock Nut, Gasket, Earth Tag, Shroud, Serrated Washer

7 How to order

CN-A2FF / 20b / M20 x NPT1/2"
Gland type — Size — Male thread size — Female thread size

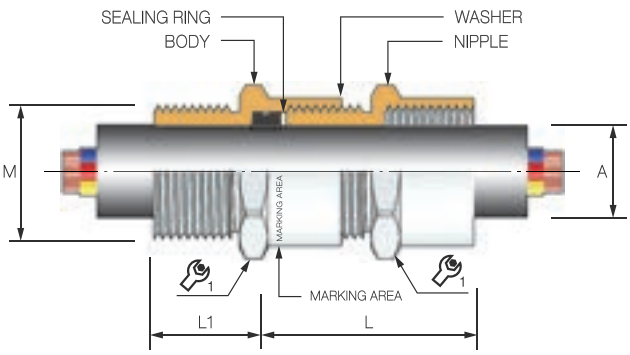

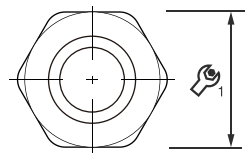

※ The length of the thread can be changed on required.

CN-A2FF Type / size	Entry thread size (M)		Cable Range(A)	Thread length (L1)			1	L
	Metric	NPT , PF		Metric	NPT	PF		
A2FF-16a	M16 / M20	3/8“ / 1/2”	4 ~ 8	15	13 / 15	13 / 17	22	37
A2FF-16b	M16 / M20	3/8“ / 1/2”	7 ~ 10	15	13 / 15	13 / 17	22	37
A2FF-20a	M20 / M25	1/2“ / 3/4”	9 ~ 13	15	15 / 16	17 / 17	27	38
A2FF-20b	M20 / M25	1/2“ / 3/4”	12 ~ 15	15	15 / 16	17 / 17	27	38
A2FF-25a	M25 / M32	3/4“ / 1”	14 ~ 18	15	16 / 18	17 / 22	32	41
A2FF-25b	M25 / M32	3/4“ / 1”	17 ~ 20	15	16 / 18	17 / 22	32	41
A2FF-32a	M32 / M40	1“ / 1-1/4”	18 ~ 23	15	18 / 19	22 / 22	39	46
A2FF-32b	M32 / M40	1“ / 1-1/4”	22 ~ 26	15	18 / 19	22 / 22	39	46
A2FF-40a	M40 / M50	1-1/4“ / 1-1/2”	24 ~ 29	15	19 / 19	22 / 22	48	48
A2FF-40b	M40 / M50	1-1/4“ / 1-1/2”	28 ~32.5	15	19 / 19	22 / 22	48	48
A2FF-50a	M50 / M63	1-1/2“ / 2”	31 ~ 37	15	19 / 20	22 / 23	58	51
A2FF-50b	M50 / M63	1-1/2“ / 2”	36 ~ 41	15	19 / 20	22 / 23	58	51
A2FF-63a	M63/ M75	2“ / 2-1/2”	41 ~ 46	15	20 / 27	23 / 23	73	59
A2FF-63b	M63/ M75	2“ / 2-1/2”	45 ~ 50	15	20 / 27	23 / 23	73	59
A2FF-63c	M63/ M75	2-1/2”	49 ~ 54.5	15	27	23	73	59
A2FF-75a	M75 / M90	2-1/2“ / 3”	53 ~ 59	15	27 / 28	23 / 27	85	62
A2FF-75b	M75 / M90	2-1/2“ / 3”	58 ~ 63	15	27 / 28	23 / 27	85	62
A2FF-75c	M75 / M90	2-1/2“ / 3”	62 ~ 66.5	15	27 / 28	23 / 27	85	62
A2FF-90a	M90 / M100	3“ / 3-1/2”	64 ~ 69	20	28 / 30	27 / 28	100	67
A2FF-90b	M90 / M100	3“ / 3-1/2”	68 ~ 73	20	28 / 30	27 / 28	100	67
A2FF-90c	M90 / M100	3“ / 3-1/2”	72 ~ 77	20	28 / 30	27 / 28	100	67
A2FF-100a	M100	3-1/2“ / 4”	76 ~ 81	20	30 / 31	28 / 28	112	69
A2FF-100b	M100	3-1/2“ / 4”	80 ~ 85	20	30 / 31	28 / 28	112	69
A2FF-100c	M100	3-1/2“ / 4”	84 ~ 89	20	30 / 31	28 / 28	112	69

E1F[X]

Armoured cable gland

CE Ex ATEX



1 Design specification
BS 6121, IEC 62444, EN 50262

2 Application
For use with wire braid armoured and steel tape armoured cable for Zone1 & Zone2 in hazardous area.
Double compression for outer/inner jacket of cable.

3 Certification
IECEx KGS (IECEx KGS 17.0001X)
ATEX DEKRA (17ATEX0094X)

4 Type protection
II2G Ex db IIC Gb / Ex eb IIC Gb / II2D Ex tb IIIC Db / IP66/67
The service temperature range is -60℃ to +120℃

5 Material
Brass, Brass with Nickel Plated(Standard), Stainless Steel

6 Accessories
Lock Nut, Gasket, Earth Tag, Shroud, Serrated Washer

7 How to order
{①CNE1F(X) ②* ③** ④*** }
Ex) { CNE1F(X) 20a NPT3/4" }
①Basic of model ②Gland size ③Type of entry thread ④Entry thread size

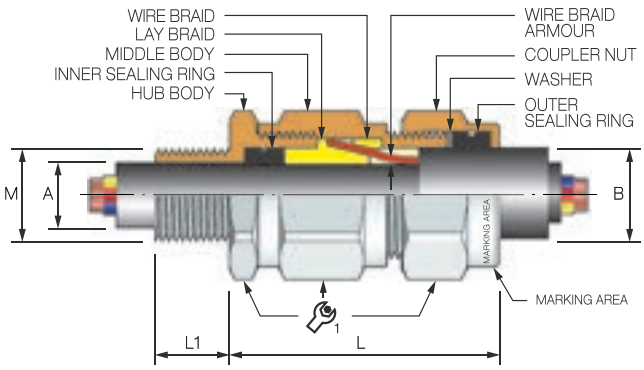

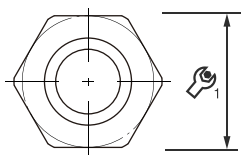

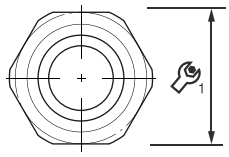

※ The length of the thread can be changed on required.

CN-E1F(X) Type / Size	Entry thread size (M)		Cable Range		Thread length (L1)			Armour size		$\wrench_1$	L
	Metric	NPT , PF	Inner(A)	Outer(B)	Metric	NPT	PF	Min	Max		
E1F(X)-16a	M16 / M20	3/8" / 1/2"	5~11	7~12	15	13 / 15	13 / 17	0.01	0.8	25	65
E1F(X)-16b	M16 / M20	3/8" / 1/2"	5~11	11~15	15	13 / 15	13 / 17	0.01	0.8	25	65
E1F(X)-20a	M20 / M25	1/2" / 3/4"	8~15	13 ~18	15	15 / 16	17 / 17	0.01	0.8	31	67
E1F(X)-20b	M20 / M25	1/2" / 3/4"	8~15	17~20	15	15 / 16	17 / 17	0.01	0.8	31	67
E1F(X)-25a	M25 / M32	3/4" / 1"	13~20	18~23	15	16 / 18	17 / 22	0.01	0.8	36	71
E1F(X)-25b	M25 / M32	3/4" / 1"	13~20	22~26	15	16 / 18	17 / 22	0.01	0.8	36	71
E1F(X)-32a	M32 / M40	1" / 1-1/4"	18~26	23~29	15	18 / 19	22 / 22	0.01	0.8	45	77
E1F(X)-32b	M32 / M40	1" / 1-1/4"	18~26	28~32	15	18 / 19	22 / 22	0.01	0.8	45	77
E1F(X)-40a	M40 / M50	1-1/4" / 1-1/2"	24~32	32~37	15	19 / 20	22 / 22	0.01	0.8	55	80
E1F(X)-40b	M40 / M50	1-1/4" / 1-1/2"	24~32	36~41	15	19 / 20	22 / 22	0.01	0.8	55	80
E1F(X)-50a	M50 / M63	1-1/2" / 2"	31~40	39~45	15	19 / 20	22 / 23	0.01	1.0	68	88
E1F(X)-50b	M50 / M63	1-1/2" / 2"	31~40	45~50	15	19 / 20	22 / 23	0.01	1.0	68	88
E1F(X)-63a	M63/ M75	2" / 2-1/2"	39~54.5	49~55	15	20 / 27	23 / 23	0.01	1.0	82	92
E1F(X)-63b	M63/ M75	2-1/2"	39~54.5	54~60	15	27	23	0.01	1.0	82	92
E1F(X)-75a	M75 / M90	2-1/2" / 3"	52~64	59~65	15	27 / 28	23 / 27	0.01	1.0	98	99
E1F(X)-75b	M75 / M90	2-1/2" / 3"	52~64	64~70	15	27 / 28	23 / 27	0.01	1.0	98	99
E1F(X)-75c	M75 / M90	2-1/2" / 3"	52~64	70~76	15	27 / 28	23 / 27	0.01	1.0	98	99
E1F(X)-90a	M90 / M100	3" / 3-1/2"	63~78	74~80	20	28 / 30	27 / 28	0.01	1.0	110	105
E1F(X)-90b	M90 / M100	3" / 3-1/2"	63~78	79~85	20	28 / 30	27 / 28	0.01	1.0	110	105
E1F(X)-90c	M90 / M100	3" / 3-1/2"	63~78	84~90	20	28 / 30	27 / 28	0.01	1.0	110	105
E1F(X)-100a	M100	3-1/2" / 4"	80~87	89~93	20	30 / 31	28 / 28	0.01	1.0	120	107
E1F(X)-100b	M100	3-1/2" / 4"	80~87	93~98	20	30 / 31	28 / 28	0.01	1.0	120	107

Tel. +82-51-264-3538 Fax. +82-51-261-9138 www.connec.kr

E1F[W]

Armoured cable gland

CE Ex ATEX



1 Design specification
BS 6121, IEC 62444, EN 50262

2 Application
For use with single wire armoured cable for Zone1 & Zone2 in hazardous area.
Double compression for outer/inner jacket of cable.

3 Certification
IECEx KGS (IECEx KGS 17.0001X)
ATEX DEKRA (17ATEX0094X)

4 Type protection
II2G Ex db IIC Gb / Ex eb IIC Gb / II2D Ex tb IIIC Db / IP66/67
The service temperature range is -60℃ to +120℃

5 Material
Brass, Brass with Nickel Plated(Standard), Stainless Steel

6 Accessories
Lock Nut, Gasket, Earth Tag, Shroud, Serrated Washer

7 How to order
{①CNE1F(W)②* ③** ④*** }
Ex) { CNE1F(W)20a NPT3/4" }
①Basic of model ②Gland size ③Type of entry thread ④Entry thread size

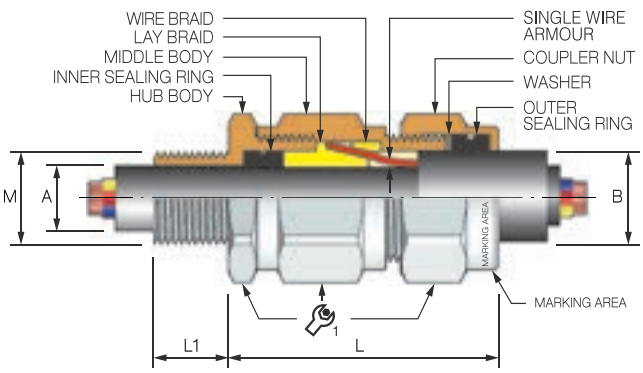

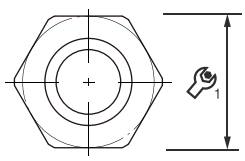

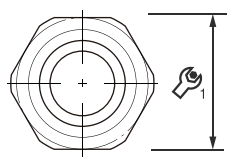

※ The length of the thread can be changed on required.

CN-E1F(W) Type / Size	Entry thread size (M)		Cable Range		Thread length (L1)			Armour size		1	L
	Metric	NPT , PF	Inner(A)	Outer(B)	Metric	NPT	PF	Min	Max		
E1F(W)-16a	M16 / M20	3/8" / 1/2"	5~11	7~12	15	13 / 15	13 / 17	0.8	1.25	25	65
E1F(W)-16b	M16 / M20	3/8" / 1/2"	5~11	11~15	15	13 / 15	13 / 17	0.8	1.25	25	65
E1F(W)-20a	M20 / M25	1/2" / 3/4"	8 ~15	13 ~18	15	15 / 16	17 / 17	0.8	1.25	31	67
E1F(W)-20b	M20 / M25	1/2" / 3/4"	8~15	17~20	15	15 / 16	17 / 17	0.8	1.25	31	67
E1F(W)-25a	M25 / M32	3/4" / 1"	13~20	18~23	15	16 / 18	17 / 22	1.25	1.6	36	71
E1F(W)-25b	M25 / M32	3/4" / 1"	13~20	22~26	15	16 / 18	17 / 22	1.25	1.6	36	71
E1F(W)-32a	M32 / M40	1" / 1-1/4"	18~26	23~29	15	18 / 19	22 / 22	1.6	2.0	45	77
E1F(W)-32b	M32 / M40	1" / 1-1/4"	18~26	28~32	15	18 / 19	22 / 22	1.6	2.0	45	77
E1F(W)-40a	M40 / M50	1-1/4" / 1-1/2"	24~32	32~37	15	19 / 20	22 / 22	1.6	2.0	55	80
E1F(W)-40b	M40 / M50	1-1/4" / 1-1/2"	24~32	36~41	15	19 / 20	22 / 22	1.6	2.0	55	80
E1F(W)-50a	M50 / M63	1-1/2" / 2"	31~40	39~45	15	19 / 20	22 / 23	1.8	2.5	68	88
E1F(W)-50b	M50 / M63	1-1/2" / 2"	31~40	45~50	15	19 / 20	22 / 23	1.8	2.5	68	88
E1F(W)-63a	M63/ M75	2" / 2-1/2"	39~54.5	49~55	15	20 / 27	23 / 23	1.8	2.5	82	92
E1F(W)-63b	M63/ M75	2-1/2"	39~54.5	54~60	15	27	23	1.8	2.5	82	92
E1F(W)-75a	M75 / M90	2-1/2" / 3"	52~64	59~65	15	27 / 28	23 / 27	1.8	2.5	98	99
E1F(W)-75b	M75 / M90	2-1/2" / 3"	52~64	64~70	15	27 / 28	23 / 27	1.8	2.5	98	99
E1F(W)-75c	M75 / M90	2-1/2" / 3"	52~64	70~76	15	27 / 28	23 / 27	1.8	2.5	98	99
E1F(W)-90a	M90 / M100	3" / 3-1/2"	63~78	74~80	20	28 / 30	27 / 28	2.0	3.5	110	105
E1F(W)-90b	M90 / M100	3" / 3-1/2"	63~78	79~85	20	28 / 30	27 / 28	2.0	3.5	110	105
E1F(W)-90c	M90 / M100	3" / 3-1/2"	63~78	84~90	20	28 / 30	27 / 28	2.0	3.5	110	105
E1F(W)-100a	M100	3-1/2" / 4"	80~87	89~93	20	30 / 31	28 / 28	2.0	3.5	120	107
E1F(W)-100b	M100	3-1/2" / 4"	80~87	93~98	20	30 / 31	28 / 28	2.0	3.5	120	107

SP

Stopping Plug

CE Ex ATEX



1 Design specification
BS 6121, IEC 62444, EN 50262

2 Application
To close unused cable gland entries and any unused entries in electrical equipment.

3 Certification
IECEx KGS (IECEx KGS 14.0009X)
ATEX DEKRA (16ATEX0018)

4 Type protection
II2G Ex db IIC Gb / Ex eb IIC Gb / II2D Ex tb IIIC Db / IP66/67
The service temperature range is -60℃ to +120℃

5 Material
Brass, Brass with Nickel Plated(Standard), Stainless Steel

6 Accessories
Lock Nut, Gasket

7 How to order

CN-SP 20 / NPT 1/2”

CN-SP 20: Stopping Plug Type / Size
NPT 1/2”: Entry thread size

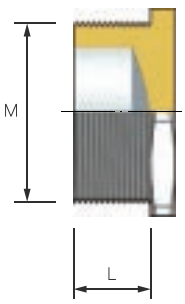

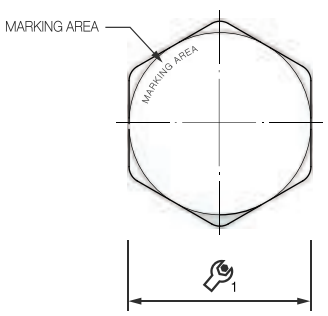

※ The length of the thread can be changed on required.

CN-SP Type / Size	Entry thread size (M)			Thread length (L)				l_1		
	Metric	NPT / PF	PG	Metric	NPT	PF	PG	Metric	NPT/PF	PG
SP-16	M16	–	7	15	–	–	11	21	–	15
SP-18	M18	–	–	15	–	–	–	24	–	–
SP-20	M20	1/2”	9	15	15	17	12	25	25	18
SP-25	M25	3/4”	11	15	16	17	12	30	30	21
SP-32	M32	1”	13.5	15	18	22	12	38	38	23
SP-40	M40	1-1/4”	16	15	19	22	12	46	48	26
SP-50	M50	1-1/2”	21	15	19	22	13	55	55	32
SP-63	M63	2”	29	15	20	23	13	70	65	41
SP-75	M75	2-1/2”	36	1.5P - 15 2.0P - 20	27	23	13	82	82	51
SP-90	M90	3”	42	20	28	27	13	98	95	58
SP-100	M100	4”	48	20	31	28	13	110	120	64

Tel. +82-51-264-3538 Fax. +82-51-261-9138 www.connec.kr

AD

Adapter

CE Ex ATEX IECEx



1 Design specification
BS 6121, IEC 62444, EN 50262

2 Application
Change smaller thread to larger thread

3 Certification
IECEx KGS (IECEx KGS 19.0003x)
ATEX DEKRA

4 Type protection
II2G Ex db IIC Gb / Ex eb IIC Gb / II2D Ex tb IIIC Db / IP66/67
The service temperature range is −60℃ to +120℃

5 Material
Brass, Brass with Nickel Plated(Standard), Stainless Steel

6 Accessories
Lock Nut, Gasket

7 How to order

CN-AD M20 * NPT 1½"

- CN-AD: Adaptor Type
- M20: Male Thread Size
- NPT 1½": Female Thread Size

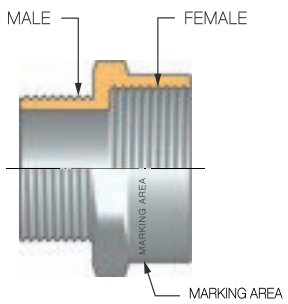

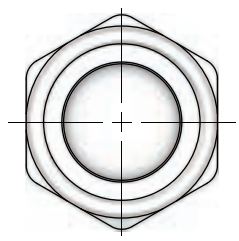

※ The length of the thread can be changed on required.

CN-AD Size			FEMALE																		
			Metric										NPT								
			M 16	M 20	M 25	M 32	M 40	M 50	M 63	M 75	M 90	M 100	1/2″	3/4″	1″	1-1/4″	1-1/2″	2″	2-1/2″	3″	3-1/2″	4″
MALE	Metric	M 16	○	○	○	○							○	○	○							
		M 20		○	○	○	○						○	○	○	○						
		M 25			○	○	○	○						○	○	○	○					
		M 32				○	○	○	○						○	○	○	○				
		M 40					○	○	○	○						○	○	○	○			
		M 50						○	○	○	○						○	○	○	○		
		M 63							○	○	○	○						○	○	○	○	○
		M 75								○	○	○							○	○	○	○
		M 90									○	○								○	○	○
		M 100										○									○	○
	PF	1/2″		○	○	○	○						○	○	○	○						
		3/4″			○	○	○	○						○	○	○	○					
		1″				○	○	○	○						○	○	○	○				
		1-1/4″					○	○	○	○						○	○	○	○			
		1-1/2″						○	○	○	○						○	○	○	○		
		2″							○	○	○	○						○	○	○	○	○
		2-1/2″								○	○	○							○	○	○	○
		3″									○	○								○	○	○
		3-1/2″																			○	○
		4″																				○
	NPT	1/2″		○	○	○	○						○	○	○	○						
		3/4″			○	○	○	○						○	○	○	○					
		1″				○	○	○	○						○	○	○	○				
		1-1/4″					○	○	○	○						○	○	○	○			
		1-1/2″						○	○	○	○						○	○	○	○		
		2″							○	○	○	○						○	○	○	○	○
		2-1/2″								○	○	○							○	○	○	○
		3″									○	○								○	○	○
		3-1/2″										○									○	○
		4″																				○

RE

Reducer

CE Ex ATEX



1 Design specification
BS 6121, IEC 62444, EN 50262

2 Application
Change larger thread to smaller thread

3 Certification
IECEx KGS (IECEx KGS 19.0003x)
ATEX DEKRA

4 Type protection
II2G Ex db IIC Gb / Ex eb IIC Gb / II2D Ex tb IIIC Db / IP66/67
The service temperature range is −60℃ to +120℃

5 Material
Brass, Brass with Nickel Plated(Standard), Stainless Steel

6 Accessories
Lock Nut, Gasket

7 How to order

CN-RE PF1" * NPT 3/4"

- CN-RE PF1" * NPT 3/4" — Female Thread Size
- CN-RE PF1" * NPT 3/4" — Male Thread Size
- CN-RE PF1" * NPT 3/4" — Reducer Type

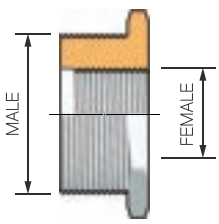

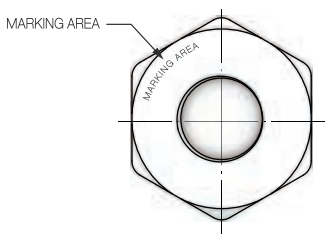

※ The length of the thread can be changed on required.

CN-RE Size			FEMALE																		
			Metric										NPT								
			M 16	M 20	M 25	M 32	M 40	M 50	M 63	M 75	M 90	M 100	1/2″	3/4″	1″	1–1/4″	1–1/2″	2″	2–1/2″	3″	3–1/2″	4″
MALE	Metric	M 16																				
		M 20	O																			
		M 25	O	O									O									
		M 32	O	O	O								O	O								
		M 40	O	O	O	O							O	O	O							
		M 50	O	O	O	O	O						O	O	O	O						
		M 63	O	O	O	O	O	O					O	O	O	O	O					
		M 75	O	O	O	O	O	O	O				O	O	O	O	O	O				
		M 90	O	O	O	O	O	O	O	O			O	O	O	O	O	O	O			
		M 100	O	O	O	O	O	O	O	O	O		O	O	O	O	O	O	O	O		
	PF	1/2″	O																			
		3/4″	O	O									O									
		1″	O	O	O								O	O								
		1–1/4″	O	O	O	O							O	O	O							
		1–1/2″	O	O	O	O	O						O	O	O	O						
		2″	O	O	O	O	O	O					O	O	O	O	O					
		2–1/2″	O	O	O	O	O	O	O				O	O	O	O	O	O				
		3″	O	O	O	O	O	O	O	O			O	O	O	O	O	O	O			
		3–1/2″	O	O	O	O	O	O	O	O	O		O	O	O	O	O	O	O	O		
		4″	O	O	O	O	O	O	O	O	O	O	O	O	O	O	O	O	O	O	O	
	NPT	1/2″	O																			
		3/4″	O	O									O									
		1″	O	O	O								O	O								
		1–1/4″	O	O	O	O							O	O	O							
		1–1/2″	O	O	O	O	O						O	O	O	O						
		2″	O	O	O	O	O	O					O	O	O	O	O					
		2–1/2″	O	O	O	O	O	O	O				O	O	O	O	O	O				
		3″	O	O	O	O	O	O	O	O			O	O	O	O	O	O	O			
		3–1/2″	O	O	O	O	O	O	O	O	O		O	O	O	O	O	O	O	O		
		4″	O	O	O	O	O	O	O	O	O	O	O	O	O	O	O	O	O	O	O	

Tel. +82-51-264-3538 Fax. +82-51-261-9138 www.connec.kr

PC

Packing type cable gland



1 Application

This cable gland is connecter with conduit pipe for pipe connection or machine.

2 Certification

KGS(15-GA2BO-0397X) KGS(15-GA2BO-0400X)
KGS(15-GA2BO-0398X) KGS(15-GA2BO-0401X)
KGS(15-GA2BO-0399X) KGS(15-GA2BO-0402X)

3 Type protection

Ex d IIC, Ex e II, IP66/67
The service temperature range is -20°C to +60°C

4 Material

Brass, Brass with Nickel Plated(Standard), Stainless Steel

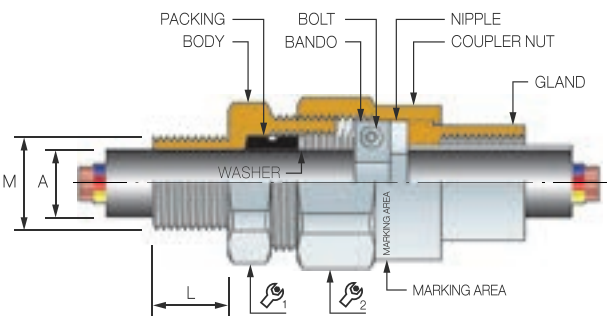

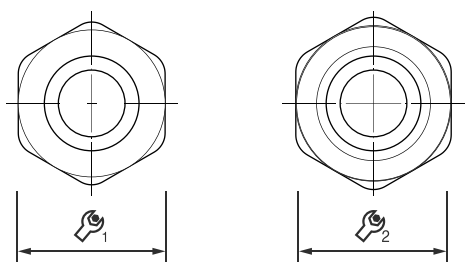

※ The length of the thread can be changed on required.

CN-PC Type / Size	Entry thread size (M)		Cable Range(A)	Thread length (L)			W_1	W_2
	PF , NPT	Metric		PF	NPT	Metric		
PC-16	1/2”	M20	6 ~ 13	17	15	15	30	32
PC-22	3/4”	M25	13 ~ 18	17	16	15	36	38
PC-28	1”	M32	18 ~ 22	22	18	15	42	44
PC-36	1-1/4”	M40	22 ~ 29	22	19	15	52	55
PC-42	1-1/2”	M50	29 ~ 35	22	19	15	57	60
PC-54	2”	M63	35 ~ 46	23	20	15	70	73
PC-70	2-1/2”	M75	46 ~ 56	23	27	15	88	93
PC-82	3”	M90	56 ~ 75	27	28	20	101	106
PC-104	4”	M110	75 ~ 88	28	31	20	127	136

EF

EX-Flexible fittings



1 Application

This conduit fitting have high flameproofness, adequate flexibility and universal jointability. They can be widely used for flexible wirings of conduit system in hazardous areas.

2 Certification

KGS(15-GA2BO-0030X) KGS(15-GA2BO-0031X)
KGS(15-GA2BO-0032X)

3 Type protection

Ex d IIC
The service temperature range is -20°C to +100°C

4 Material

Flexible part : Stainless Steel
Connector part : Brass with Nickel Plated(Standard), Stainless Steel

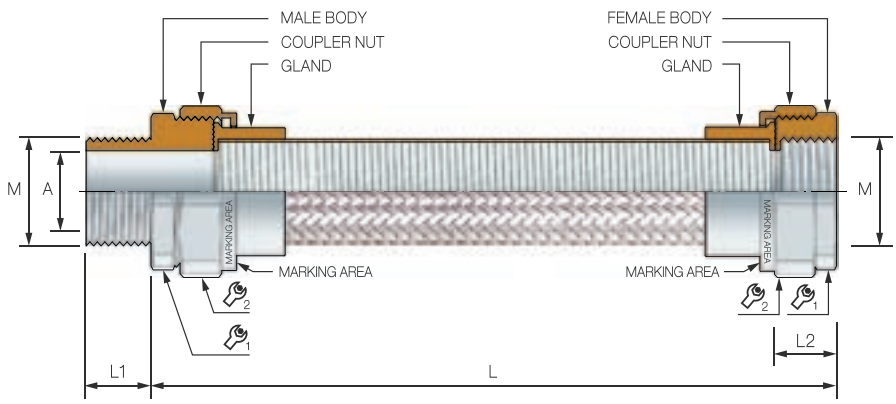

MALE FEMALE

CN-EF Type / Size	Entry thread size (M)		Cable Range(A)	Thread length (L1)			Thread length (L2)			$\square_1$	$\square_2$
	PF , NPT	Metric		PF	NPT	Metric	PF	NPT	Metric		
EF-16	1/2"	M20	6 ~13	17	15	15	18	18	17	30	33
EF-22	3/4"	M25	13~ 18	17	16	15	19	18	17	38	41
EF-28	1"	M32	18~ 22	22	18	15	24	23	17	45	50
EF-36	1-1/4"	M40	22~ 29.5	22	19	15	25	25	17	53	58
EF-42	1-1/2"	M50	29~35	22	19	15	27	25	17	59	64
EF-54	2"	M63	35~ 46	23	20	15	28	27	17	73	78
EF-70	2-1/2"	M75	46~ 56	23	27	15	30	30	17	88	95
EF-82	3"	M90	56~ 75	27	28	20	31	32	19	102	110
EF-104	4"	M110	75~88	28	31	20	33	33	20	130	138

Tel. +82-51-264-3538 Fax. +82-51-261-9138 www.connec.kr

EU

Union coupling



1 Application

The conduit union connects two sections of rigid conduit when neither section can physically turn.

2 Certification

KGS(15-GA2BO-0049X) KGS(15-GA2BO-0050X)
KGS(15-GA2BO-0051X)

3 Type protection

Ex d IIC
The service temperature range is -20°C to +100°C

4 Material

Electro-Galvanized Steel(Standard), Brass with Nickel Plated, Stainless Steel

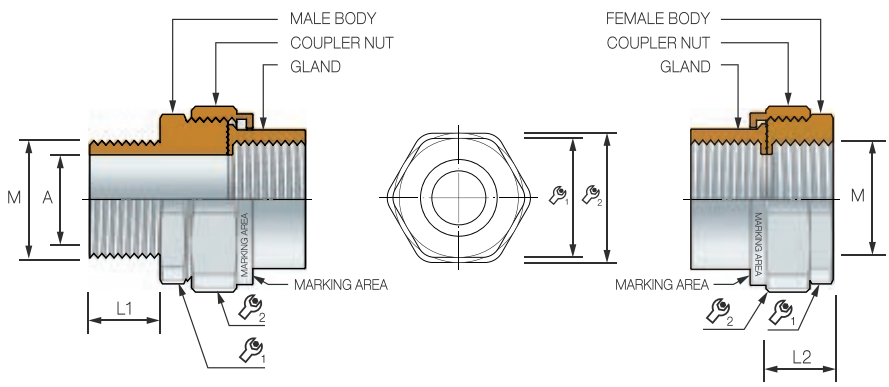

MALE FEMALE

CN-EU Type / Size	Entry thread size (M)		Cable DIA(A)	Thread length (L1)			Thread length (L2)			$\wrench_1$	$\wrench_2$
	Metric	PF , NPT		Metric	NPT	PF	Metric	NPT	PF		
EU-16	M20	1/2”	15	15	15	17	17	18	16	32	35
EU-22	M25	3/4”	20	15	16	17	17	18	17	38	41
EU-28	M32	1”	25	15	18	22	17	23	22	46	50
EU-36	M40	1-1/4”	33	15	19	22	17	25	23	55	61
EU-42	M50	1-1/2”	39	15	19	22	17	25	23	64	67
EU-54	M63	2”	51	15	20	23	17	27	23	74	78
EU-70	M75	2-1/2”	65	15	27	23	17	30	28	94	98
EU-82	M90	3”	77	20	28	27	19	32	28	108	114
EU-104	M110	4”	101	20	31	28	20	33	30	131	138

A2FK

Non armoured cable gland



❶ Design specification
BS 6121, IEC 62444, EN 50262

❷ Application
For use with all types of unarmoured and braided cable for Zone1 & Zone2 in hazardous area. Single compression for jacket of cable.
In some case, double compression can be used.

❸ Certification
KGS(17-GA2BO-0273X) KGS(17-GA2BO-0276X)
KGS(17-GA2BO-0274X) KGS(17-GA2BO-0277X)
KGS(17-GA2BO-0275X) KGS(17-GA2BO-0278X)

❹ Type protection
Ex d IIC / Ex tD A21 / IP66/67
The service temperature range is -60℃ to +120℃

❺ Material
Brass, Brass with Nickel Plated(Standard), Stainless Steel

❻ Accessories
Lock Nut, Gasket, Earth Tag, Shroud, Serrated Washer

❼ How to order CN-A2FK / 20b / M20
Gland type / Size / Entry thread size

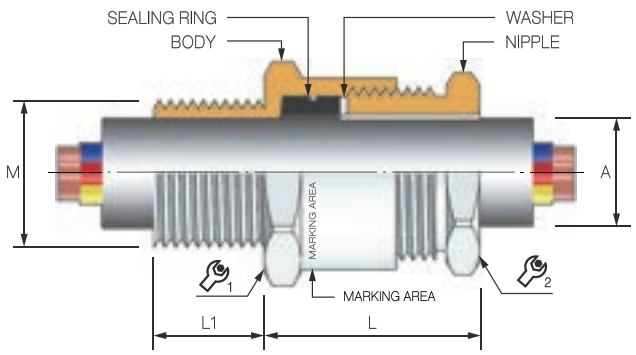

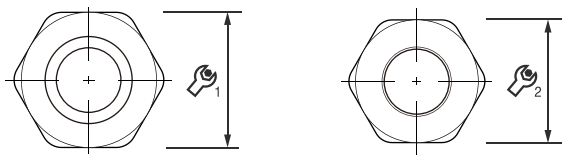

※ The length of the thread can be changed on required.

CN-A2FK Type / Size	Entry thread size (M)		Cable Range(A)	Thread length (L1)			$\square_1$	$\square_2$	L
	Metric	NPT , PF		Metric	NPT	PF			
A2FK-16a	M16 / M20	3/8“ / 1/2”	4 ~ 8	15	13 / 15	13 / 17	22	19	20
A2FK-16b	M16 / M20	3/8“ / 1/2”	7 ~ 10	15	13 / 15	13 / 17	22	19	20
A2FK-20a	M20 / M25	1/2“ / 3/4”	9 ~ 13	15	15 / 16	17 / 17	27	24	21
A2FK-20b	M20 / M25	1/2“ / 3/4”	12 ~ 15	15	15 / 16	17 / 17	27	24	21
A2FK-25a	M25 / M32	3/4“ / 1”	14 ~ 18	15	16 / 18	17 / 22	32	28	25
A2FK-25b	M25 / M32	3/4“ / 1”	17 ~ 20	15	16 / 18	17 / 22	32	28	25
A2FK-32a	M32 / M40	1“ / 1-1/4”	18 ~ 23	15	18 / 19	22 / 22	39	34	26
A2FK-32b	M32 / M40	1“ / 1-1/4”	22 ~ 26	15	18 / 19	22 / 22	39	34	26
A2FK-40a	M40 / M50	1-1/4“ / 1-1/2”	24 ~ 29	15	19 / 19	22 / 22	48	42	28
A2FK-40b	M40 / M50	1-1/4“ / 1-1/2”	28 ~32.5	15	19 / 19	22 / 22	48	42	28
A2FK-50a	M50 / M63	1-1/2“ / 2”	31 ~ 37	15	19 / 20	22 / 23	58	53	30
A2FK-50b	M50 / M63	1-1/2“ / 2”	36 ~ 41	15	19 / 20	22 / 23	58	53	30
A2FK-63a	M63/ M75	2“ / 2-1/2”	41 ~ 46	15	20 / 27	23 / 23	73	65	31
A2FK-63b	M63/ M75	2“ / 2-1/2”	45 ~ 50	15	20 / 27	23 / 23	73	65	31
A2FK-63c	M63/ M75	2-1/2”	49 ~ 54.5	15	27	23	73	65	31
A2FK-75a	M75 / M90	2-1/2“ / 3”	53 ~ 59	15	27 / 28	23 / 27	85	78	36
A2FK-75b	M75 / M90	2-1/2“ / 3”	58 ~ 63	15	27 / 28	23 / 27	85	78	36
A2FK-75c	M75 / M90	2-1/2“ / 3”	62 ~ 66.5	15	27 / 28	23 / 27	85	78	36
A2FK-90a	M90 / M100	3“ / 3-1/2”	64 ~ 69	20	28 / 30	27 / 28	100	92	38
A2FK-90b	M90 / M100	3“ / 3-1/2”	68 ~ 73	20	28 / 30	27 / 28	100	92	38
A2FK-90c	M90 / M100	3“ / 3-1/2”	72 ~ 77	20	28 / 30	27 / 28	100	92	38
A2FK-100a	M100	3-1/2“ / 4”	76 ~ 81	20	30 / 31	28 / 28	112	104	40
A2FK-100b	M100	3-1/2“ / 4”	80 ~ 85	20	30 / 31	28 / 28	112	104	40
A2FK-100c	M100	3-1/2“ / 4”	84 ~ 89	20	30 / 31	28 / 28	112	104	40

Tel. +82-51-264-3538 Fax. +82-51-261-9138 www.connec.kr

E1FK[X]

Armoured cable gland



❶ Design specification
BS 6121, IEC 62444, EN 50262

❷ Application
For use with wire braid armoured and steel tape armoured cable for Zone1 & Zone2 in hazardous area.
Double compression for outer/inner jacket of cable.

❸ Certification
KGS(18-GA2BO-0535X) KGS(18-GA2BO-0536X) KGS(18-GA2BO-0537X)

❹ Type protection
Ex d IIC / Ex tD A21 / IP66/67
The service temperature range is -60℃ to +120℃

❺ Material
Brass, Brass with Nickel Plated(Standard), Stainless Steel

❻ Accessories
Lock Nut, Gasket, Earth Tag, Shroud, Serrated Washer

❼ How to order
{① CNE1FK(X) ②* ③** ④*** }
Ex) { CNE1FK(X) 20a NPT3/4" }
①Basic of model ②Gland size ③Type of entry thread ④Entry thread size

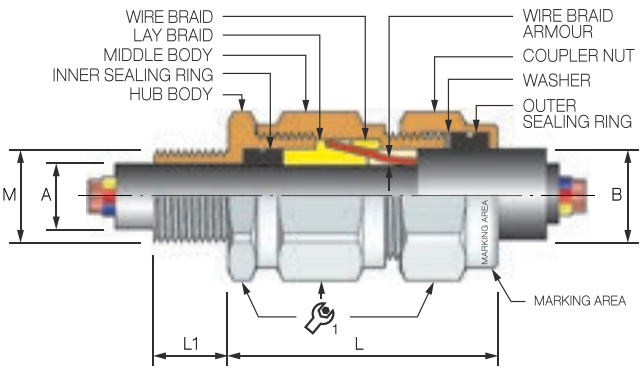

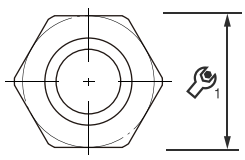

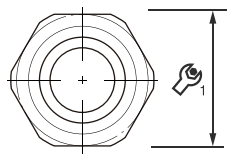

※ The length of the thread can be changed on required.

CN-E1FK(X) Type / Size	Entry thread size (M)		Cable Range		Thread length (L1)			Armour size		⌀1	L
	Metric	NPT , PF	Inner(A)	Outer(B)	Metric	NPT	PF	Min	Max		
E1FK(X)-16a	M16 / M20	3/8" / 1/2"	5~11	7~12	15	13 / 15	13 / 17	0.01	0.8	25	65
E1FK(X)-16b	M16 / M20	3/8" / 1/2"	5~11	11~15	15	13 / 15	13 / 17	0.01	0.8	25	65
E1FK(X)-20a	M20 / M25	1/2" / 3/4"	8 ~15	13 ~18	15	15 / 16	17 / 17	0.01	0.8	31	67
E1FK(X)-20b	M20 / M25	1/2" / 3/4"	8 ~15	17~20	15	15 / 16	17 / 17	0.01	0.8	31	67
E1FK(X)-25a	M25 / M32	3/4" / 1"	13~20	18~23	15	16 / 18	17 / 22	0.01	0.8	36	71
E1FK(X)-25b	M25 / M32	3/4" / 1"	13~20	22~26	15	16 / 18	17 / 22	0.01	0.8	36	71
E1FK(X)-32a	M32 / M40	1" / 1-1/4"	18~26	23~29	15	18 / 19	22 / 22	0.01	0.8	45	77
E1FK(X)-32b	M32 / M40	1" / 1-1/4"	18~26	28~32	15	18 / 19	22 / 22	0.01	0.8	45	77
E1FK(X)-40a	M40 / M50	1-1/4" / 1-1/2"	24~32	32~37	15	19 / 20	22 / 22	0.01	0.8	55	80
E1FK(X)-40b	M40 / M50	1-1/4" / 1-1/2"	24~32	36~41	15	19 / 20	22 / 22	0.01	0.8	55	80
E1FK(X)-50a	M50 / M63	1-1/2" / 2"	31~40	39~45	15	19 / 20	22 / 23	0.01	1.0	68	88
E1FK(X)-50b	M50 / M63	1-1/2" / 2"	31~40	45~50	15	19 / 20	22 / 23	0.01	1.0	68	88
E1FK(X)-63a	M63/ M75	2" / 2-1/2"	39~54.5	49~55	15	20 / 27	23 / 23	0.01	1.0	82	92
E1FK(X)-63b	M63/ M75	2-1/2"	39~54.5	54~60	15	27	23	0.01	1.0	82	92
E1FK(X)-75a	M75 / M90	2-1/2" / 3"	52~64	59~65	15	27 / 28	23 / 27	0.01	1.0	98	99
E1FK(X)-75b	M75 / M90	2-1/2" / 3"	52~64	64~70	15	27 / 28	23 / 27	0.01	1.0	98	99
E1FK(X)-75c	M75 / M90	2-1/2" / 3"	52~64	70~76	15	27 / 28	23 / 27	0.01	1.0	98	99
E1FK(X)-90a	M90 / M100	3" / 3-1/2"	63~78	74~80	20	28 / 30	27 / 28	0.01	1.0	110	105
E1FK(X)-90b	M90 / M100	3" / 3-1/2"	63~78	79~85	20	28 / 30	27 / 28	0.01	1.0	110	105
E1FK(X)-90c	M90 / M100	3" / 3-1/2"	63~78	84~90	20	28 / 30	28	0.01	1.0	110	105
E1FK(X)-100a	M100	3-1/2" / 4"	80~87	89~93	20	30 / 31	28 / 28	0.01	1.0	120	107
E1FK(X)-100b	M100	3-1/2" / 4"	80~87	93~98	20	30 / 31	28 / 28	0.01	1.0	120	107

E1FK[W]

Armoured cable gland



❶ Design specification
BS 6121, IEC 62444, EN 50262

❷ Application
For use with single wire armoured cable for Zone1 & Zone2 in hazardous area.
Double compression for outer/inner jacket of cable.

❸ Certification
KGS(18-GA2BO-0535X) KGS(18-GA2BO-0536X) KGS(18-GA2BO-0537X)

❹ Type protection
Ex d IIC / Ex tD A21 / IP66/67
The service temperature range is -60℃ to +120℃

❺ Material
Brass, Brass with Nickel Plated(Standard), Stainless Steel

❻ Accessories
Lock Nut, Gasket, Earth Tag, Shroud, Serrated Washer

❼ How to order
{① CNE1FK(W) ②* ③** ④*** }
Ex) { CNE1FK(W) 20a NPT3/4" }
①Basic of model ②Gland size ③Type of entry thread ④Entry thread size

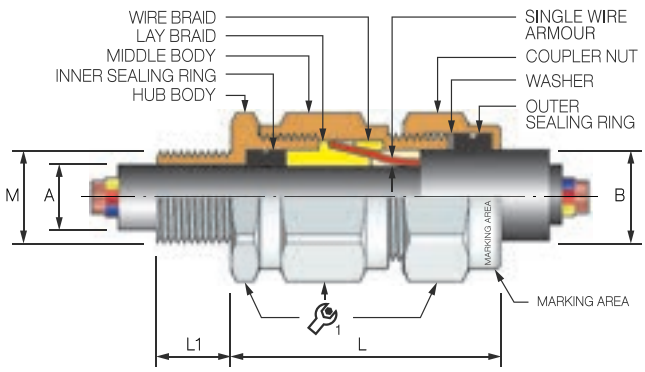

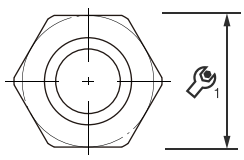

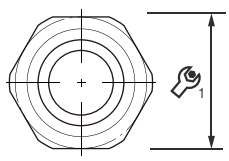

※ The length of the thread can be changed on required.

CN-E1FK(W) Type / Size	Entry thread size (M)		Cable Range		Thread length (L1)			Armour size		1	L
	Metric	NPT , PF	Inner(A)	Outer(B)	Metric	NPT	PF	Min	Max		
E1FK(W)-16a	M16 / M20	3/8" / 1/2"	5~11	7~12	15	13 / 15	13 / 17	0.8	1.25	25	65
E1FK(W)-16b	M16 / M20	3/8" / 1/2"	5~11	11~15	15	13 / 15	13 / 17	0.8	1.25	25	65
E1FK(W)-20a	M20 / M25	1/2" / 3/4"	8 ~15	13 ~18	15	15 / 16	17 / 17	0.8	1.25	31	67
E1FK(W)-20b	M20 / M25	1/2" / 3/4"	8~15	17~20	15	15 / 16	17 / 17	0.8	1.25	31	67
E1FK(W)-25a	M25 / M32	3/4" / 1"	13~20	18~23	15	16 / 18	17 / 22	1.25	1.6	36	71
E1FK(W)-25b	M25 / M32	3/4" / 1"	13~20	22~26	15	16 / 18	17 / 22	1.25	1.6	36	71
E1FK(W)-32a	M32 / M40	1" / 1-1/4"	18~26	23~29	15	18 / 19	22 / 22	1.6	2.0	45	77
E1FK(W)-32b	M32 / M40	1" / 1-1/4"	18~26	28~32	15	18 / 19	22 / 22	1.6	2.0	45	77
E1FK(W)-40a	M40 / M50	1-1/4" / 1-1/2"	24~32	32~37	15	19 / 20	22 / 22	1.6	2.0	55	80
E1FK(W)-40b	M40 / M50	1-1/4" / 1-1/2"	24~32	36~41	15	19 / 20	22 / 22	1.6	2.0	55	80
E1FK(W)-50a	M50 / M63	1-1/2" / 2"	31~40	39~45	15	19 / 20	22 / 23	1.8	2.5	68	88
E1FK(W)-50b	M50 / M63	1-1/2" / 2"	31~40	45~50	15	19 / 20	22 / 23	1.8	2.5	68	88
E1FK(W)-63a	M63/ M75	2-1/2"	39~54.5	49~55	15	20 / 27	23 / 23	1.8	2.5	82	92
E1FK(W)-63b	M63/ M75	2" / 2-1/2"	39~54.5	54~60	15	27	23	1.8	2.5	82	92
E1FK(W)-75a	M75 / M90	2-1/2" / 3"	52~64	59~65	15	27 / 28	23 / 27	1.8	2.5	98	99
E1FK(W)-75b	M75 / M90	2-1/2" / 3"	52~64	64~70	15	27 / 28	23 / 27	1.8	2.5	98	99
E1FK(W)-75c	M75 / M90	2-1/2" / 3"	52~64	70~76	15	27 / 28	23 / 27	1.8	2.5	98	99
E1FK(W)-90a	M90 / M100	3" / 3-1/2"	63~78	74~80	20	28 / 30	27 / 28	2.0	3.5	110	105
E1FK(W)-90b	M90 / M100	3" / 3-1/2"	63~78	79~85	20	28 / 30	27 / 28	2.0	3.5	110	105
E1FK(W)-90c	M90 / M100	3" / 3-1/2"	63~78	84~90	20	28 / 30	27 / 28	2.0	3.5	110	105
E1FK(W)-100a	M100	3-1/2" / 4"	80~87	89~93	20	30 / 31	28 / 28	2.0	3.5	120	107
E1FK(W)-100b	M100	3-1/2" / 4"	80~87	93~98	20	30 / 31	28 / 28	2.0	3.5	120	107

Tel. +82-51-264-3538 Fax. +82-51-261-9138 www.connec.kr

CONNEC Tel. 051-264-3538 Fax. 051-261-9138 www.connec.kr



NORMAL CABLE GLAND

A2FK-U / E1FK-U / JIS / NG /
PGM / WD / DIN / ML /
ML[Polyamide] / CW /
A2F[EF] / A2F[SG]

A2FK-U

Non armoured cable gland



1 Design specification
BS 6121, IEC 62444, EN 50262

2 Application
For use with all types of unarmoured and braided cable for Zone1 & Zone2 in hazardous area. Single compression for jacket of cable.
In some case, double compression can be used.

3 Certification
KR(HDOIT-0096-18)

4 Ingress protection
IP66/67

5 Material
Brass, Brass with Nickel Plated(Standard), Stainless Steel

6 Accessories
Lock Nut, Gasket, Earth Tag, Shroud, Serrated Washer

7 How to order

CN-A2FK-U / 20 / M20
Gland type | Size | Entry thread size

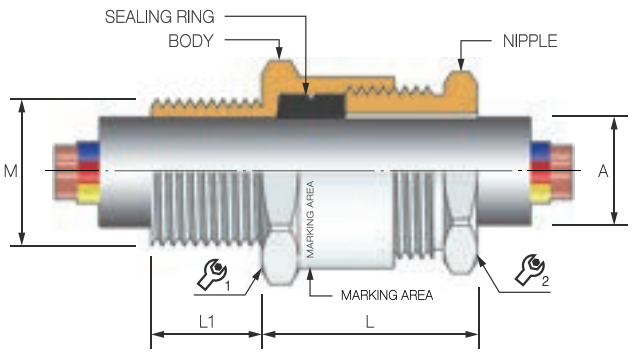

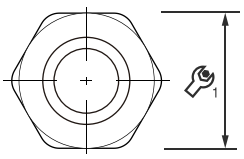

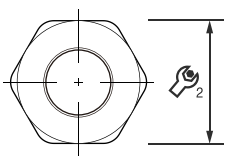

※ The length of the thread can be changed on required.

CN-A2FK-U Type / Size	Entry thread size (M)		Cable Range(A)	Thread length (L1)			1	2	L
	Metric	NPT , PF		Metric	NPT	PF			
A2FK-U16	M16 / M20	3/8“ / 1/2”	5 ~ 11	15	13 / 15	13 / 17	22	19	20
A2FK-U20	M20 / M25	1/2“ / 3/4”	9 ~ 15.5	15	15 / 16	17 / 17	27	24	21
A2FK-U25	M25 / M32	3/4“ / 1”	13 ~ 20.3	15	16 / 18	17 / 22	32	29	25
A2FK-U32	M32 / M40	1“ / 1-1/4”	17 ~ 26.5	15	18 / 19	22 / 22	39	36	26
A2FK-U40	M40 / M50	1-1/4“ / 1-1/2”	24 ~ 32.5	15	19 / 20	22 / 22	48	44	28
A2FK-U50	M50 / M63	1-1/2“ / 2”	30 ~ 42.5	15	20 / 20	22 / 23	58	54	30
A2FK-U63	M63/ M75	2“ / 2-1/2”	42 ~ 55.5	15 / 20	20 / 27	23 / 23	74	69	31
A2FK-U75	M75 / M90	2-1/2“ / 3”	55 ~ 67	20	27 / 28	23 / 27	87	81	36
A2FK-U90	M90 / M100	3“ / 3-1/2”	67 ~ 78	20	28 / 30	27 / 28	102	95	38
A2FK-U100	M100 / M115	3-1/2“ / 4”	78 ~ 90	20 / 28	30 / 31	28 / 28	112	104	40
A2FK-U115	M115	4”	90 ~ 102	28	31	28	125	116	45

Tel. +82-51-264-3538 Fax. +82-51-261-9138 www.connec.kr

E1FK-U

Armoured cable gland



1 Design specification
BS 6121, IEC 62444, EN 50262

2 Application
For use with any type of armoured cable for Zone1 & Zone2 in hazardous area.
Double compression for outer/inner jacket of cable.

3 Certification
KR(HDOIT-0097-18)

4 Ingress protection
IP66/67

5 Material
Brass, Brass with Nickel Plated(Standard), Stainless Steel

6 Accessories
Lock Nut, Gasket, Earth Tag, Shroud, Serrated Washer

7 How to order

CN-E1FK-U / 20 / M20
Gland type — Size — Entry thread size

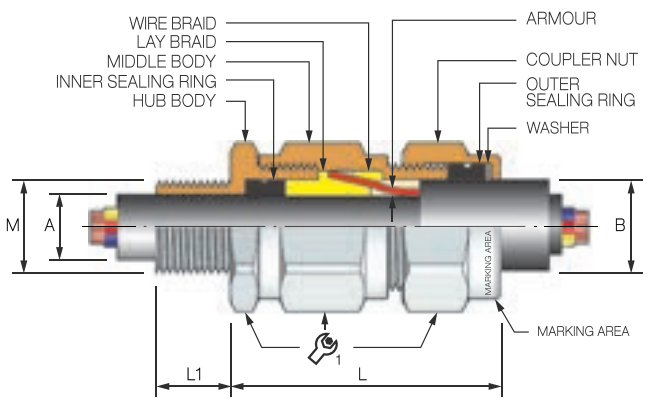

BS 6121 Type of Gland
(The suffix for each type of protection)

Single wire armoured	W
Wire braided	X
Aluminium strip armoured	Y
Double steel tape armoured	Z



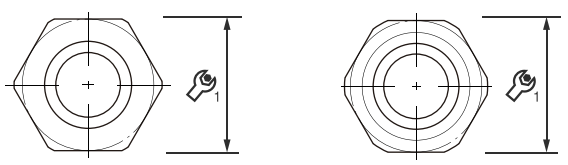

※ The length of the thread can be changed on required.

CN-E1FK-U Type / Size	Entry thread size (M)		Cable Range		Thread length (L1)			Armour size		1	L
	Metric	NPT, PF	Inner(A)	Outer(B)	Metric	NPT	PF	Braid	Wire		
E1FK-U16	M16 / M20	3/8" / 1/2"	5~12	8~16	15	13 / 15	13 / 17	0.01~0.8	0.8~1.25	26	65
E1FK-U20	M20 / M25	1/2" / 3/4"	9 ~16	14 ~21	15	15 / 16	17 / 17	0.01~0.8	0.8~1.25	31	67
E1FK-U25	M25 / M32	3/4" / 1"	13~21	19~26	15	16 / 18	17 / 22	0.01~0.8	1.25~1.6	38	71
E1FK-U32	M32 / M40	1" / 1-1/4"	17~26	23~33	15	18 / 19	22 / 22	0.01~0.8	1.6~2.0	47	77
E1FK-U40	M40 / M50	1-1/4" / 1-1/2"	24~34	32~42	15	19 / 20	22 / 22	0.01~0.8	1.6~2.0	56	80
E1FK-U50	M50 / M63	1-1/2" / 2"	30~42	40~54	15	19 / 20	22 / 23	0.01~1.0	1.8~2.5	70	88
E1FK-U63	M63/ M75	2" / 2-1/2"	42~55	54~66	15 / 20	20 / 27	23 / 23	0.01~1.0	1.8~2.5	82	92
E1FK-U75	M75 / M90	2-1/2" / 3"	55~67	66~80	20	27 / 28	23 / 27	0.01~1.0	1.8~2.5	98	99
E1FK-U90	M90 / M100	3" / 3-1/2"	67~80	76~90	20	28 / 30	27 / 28	0.01~1.0	2.0~3.5	110	105
E1FK-U100	M100 / M115	3-1/2" / 4"	80~90	88~102	20 / 28	30 / 31	28 / 28	0.01~1.0	2.0~3.5	122	107
E1FK-U115	M115	4"	90~102	100~115	28	31	28	0.01~1.0	2.0~3.5	137	115

JIS

JIS cable gland



1 Design specification
JIS F8801 H–"A" Type Gland

2 Application
For use with all types of unarmoured cable.

3 Ingress protection
IP67

4 Material
Brass, Brass with Chrome Plated(Standard), Stainless Steel

5 How to order

CN-JIS 15 b
- CN-JIS 15: Gland type / Size
- b: Packing Size

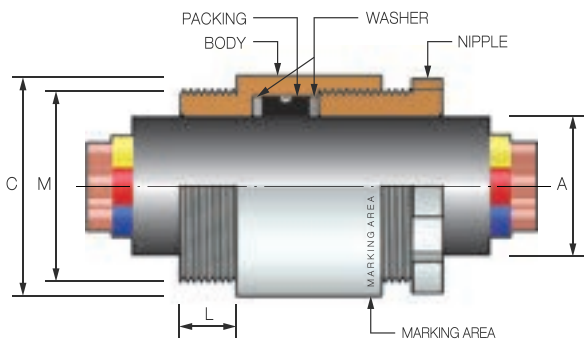

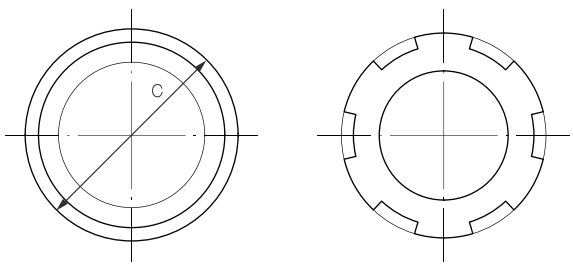

※ The length of the thread can be changed on required.

CN-JIS Type / Size	Entry thread size (M)		Cable Range(A)	C	Packing I.D			L
	PF	Entry hole(Ø)			a	b	c	
JIS-10	3/8"	17	6 ~ 8	22	7	8	-	11
JIS-15	1/2"	21	8 ~ 11	28	9	10	11	11
JIS-20	3/4"	26.5	11 ~ 15	34	12	13	15	11
JIS-25	1"	33.5	15 ~ 20	42	16	18	20	11
JIS-30	1-1/4"	42	20 ~ 26	50	22	24	26	12
JIS-35	1-1/2"	48	26 ~ 30	56	28	30	-	12
JIS-40	1-1/2"	48	30 ~ 34	56	32	34	-	12
JIS-45	2"	60	34 ~ 40	70	36	38	40	12
JIS-50	2"	60	40 ~ 44	70	42	44	-	12
JIS-55	2-1/2"	75.5	44 ~ 50	86	46	48	50	12
JIS-60	2-1/2"	75.5	50 ~ 56	86	52	54	56	12
JIS-65	3"	88	56 ~ 60	100	58	60	-	15
JIS-70	3"	88	60 ~ 64	100	62	64	-	15
JIS-75	3"	88	64 ~ 70	100	66	68	70	15
JIS-80	3-1/2"	101	70 ~ 74	110	72	74	-	15
JIS-85	3-1/2"	101	74 ~ 78	110	76	78	-	15
JIS-90	4"	114	78 ~ 82	130	80	82	-	15
JIS-95	4"	114	82 ~ 86	130	84	86	-	15
JIS-100	4"	114	86 ~ 93	130	88	93	-	15

Tel. +82-51-264-3538 Fax. +82-51-261-9138 www.connec.kr

NG

Non armoured cable gland



1 Application (DIN Thread, ISO Metric Thread)

For use with all types of unarmoured cable.
Suitable for fixing wires of machines, electrical applications, mechanical control boards/ boxes.

2 Ingress protection

IP66/67 (KR-HDOIT-0010-20)

3 Material

Brass, Brass with Nickel Plated(Standard), Stainless Steel

4 How to order

CN-NG / 20 / M20

Gland type / Size / Entry thread size

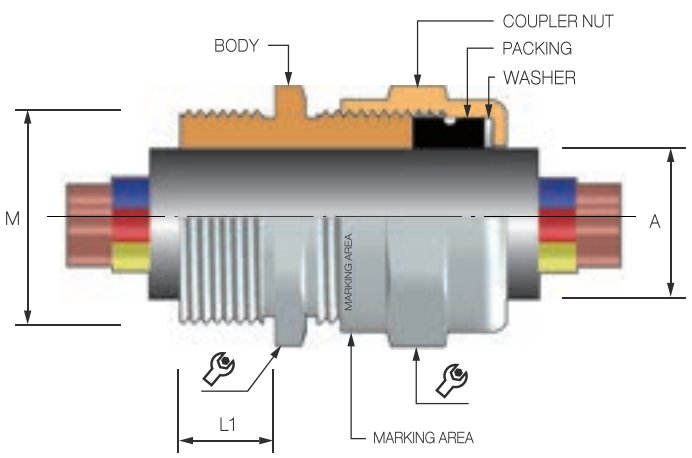

CN-NG Type / Size	Entry thread size (M)		Cable Range(A)	Thread length (L1)			
	Metric	NPT , PF		Metric	NPT	PF	
NG-16	M16 / M20	3/8“ / 1/2”	5 ~ 11	15	13	13	22
NG-20	M20 / M25	1/2“ / 3/4”	9 ~ 15	15	15	17	26
NG-25	M25 / M32	3/4“ / 1”	13 ~ 20	15	16	17	31
NG-32	M32 / M40	1“ / 1-1/4”	17 ~ 26	15	19	22	39
NG-40	M40 / M50	1-1/4“ / 1-1/2”	24 ~ 33	15	19	22	47
NG-50	M50 / M63	1-1/2“ / 2”	30 ~ 42.5	15	20	22	58
NG-63	M63/ M75	2“ / 2-1/2”	42 ~ 55	15	20	22	74
NG-75	M75 / M90	2-1/2“ / 3”	55 ~ 67	15 / 20	29	23	86
NG-90	M90 / M100	3“ / 3-1/2”	67 ~ 80	20	30	28	102
NG-100	M100 / M115	3-1/2“ / 4”	80 ~ 90	20	31	30	112
NG-115	M115	4”	90 ~ 102	20	32	30	125

PGM

PGM cable gland



1 Design specification
JIS F8801 H–"C" Type Gland

2 Application
For use with electrical equipment of battle ship and other military vessels.
PGM : unarmoured cable
PGM(Z) : wire braid armoured cable

3 Ingress protection
IP67

4 Material
Brass, Brass with Chrome Plated(Standard), Stainless Steel.

5 How to order

CN-PGM 24 d
- 24: Gland type / Size
- d: Packing Size

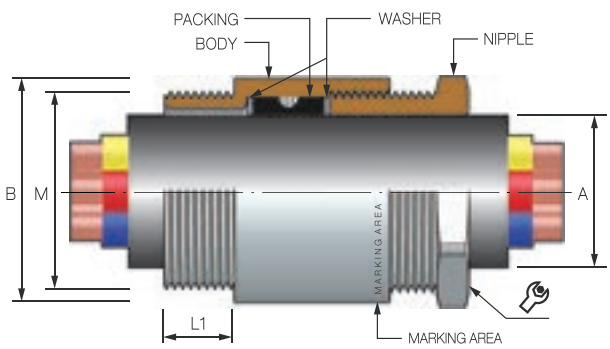

CN - PGM

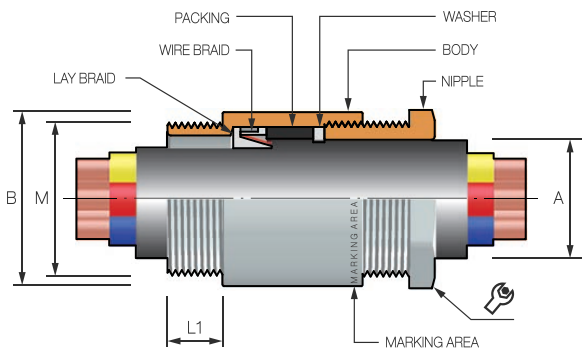

CN - PGM(Z)

※ The length of the thread can be changed on required.

CN-PGM / PGM(Z) Type / Size		Entry Thread Size(M)	Cable Range (A)	Packing I.D		Entry Hole (Ø)	B		L1
PGM-18	PGM(Z)-18	M18x1.5P	7~10	a	8	18.5	22	19	10
				b	10				
PGM-24	PGM(Z)-24	M24x1.5P	7~17	a	8	24.5	28	25	11
				b	10				
				c	12				
				d	14				
				e	16				
				f	17				
PGM-30	PGM(Z)-30	M30x2.0P	17~20	a	18	30.5	36	30	12
				b	20				
PGM-36	PGM(Z)-36	M36x2.0P	20~26	a	22	36.5	41	36	13
				b	24				
				c	26				
PGM-45	PGM(Z)-45	M45x2.0P	26~32	a	28	45.5	51	46	14
				b	30				
				c	32				
PGM-56	PGM(Z)-56	M56x2.0P	32~41	a	35	56.5	62	57	15
				b	38				
				c	41				
PGM-72	PGM(Z)-72	M72x2.0P	41~56	a	44	72.5	78	73	16
				b	48				
				c	52				
				d	56				

Tel. +82-51-264-3538 Fax. +82-51-261-9138 www.connec.kr

WD

Welding type cable gland



1 Design specification
DIN 89280 Type Gland

2 Application
For use with all types of unarmoured cable.
The length of body is 50mm.(Standard)

3 Material
Body part : Electro-galvanized Steel(Standard), Stainless Steel, Aluminium
Nipple part : Brass with Chrome Plated(Standard), Stainless Steel

4 How to order

CN-WD-S 20 c

Gland type / Size

Packing Size

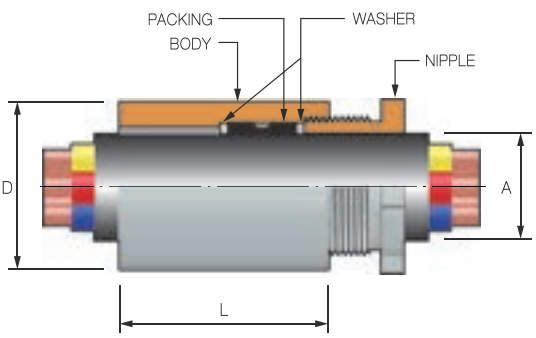

CN - WD

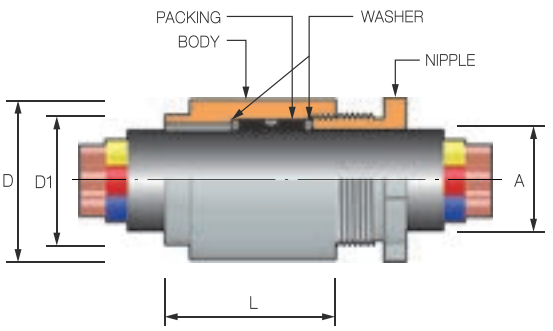

CN - WD-S

※ The length of the body can be changed on required.

CN-WD / WD-S Type / size		Entry hole size (Ø)		Cable Range(A)	Packing I.D			D1	D	L
		WD	WD-S		a	b	c			
WD-10	WD-S-10	23	17	6 ~ 8	7	8	-	16	22	50 (standard) ~ 1000
WD-15	WD-S-15	29	21	8 ~ 11	9	10	11	20	28	
WD-20	WD-S-20	36	26.5	11 ~ 15	12	13	15	26	34	
WD-25	WD-S-25	44	33.5	15 ~ 20	16	18	20	32	42	
WD-30	WD-S-30	52	42	20 ~ 26	22	24	26	41	50	
WD-35	WD-S-35	58	48	26 ~ 30	28	30	-	47	56	
WD-40	WD-S-40	58	48	30 ~ 34	32	34	-	47	56	
WD-45	WD-S-45	72	60	34 ~ 40	36	38	40	59	70	
WD-50	WD-S-50	72	60	40 ~ 44	42	44	-	59	70	
WD-55	WD-S-55	88	75.5	44 ~ 50	46	48	50	74	86	
WD-60	WD-S-60	88	75.5	50 ~ 56	52	54	56	74	86	
WD-65	WD-S-65	102	88	56 ~ 60	58	60	-	87	100	
WD-70	WD-S-70	102	88	60 ~ 64	62	64	-	87	100	
WD-75	WD-S-75	102	88	64 ~ 68	66	68	70	87	100	
WD-80	WD-S-80	112	101	70 ~ 74	72	74	-	100	110	
WD-85	WD-S-85	112	101	74 ~ 78	76	78	-	100	110	
WD-90	WD-S-90	132	114	78 ~ 82	80	82	-	112	130	
WD-95	WD-S-95	132	114	82 ~ 86	84	86	-	112	130	
WD-100	WD-S-100	132	114	86 ~ 93	88	93	-	112	130	

DIN

DIN type cable gland



1 Application

This cable gland conforms to DIN thread.(DIN 46320)
For use with unarmoured cable.

2 Material

Brass, Chrome or Nickel Plated Brass(Standard), Stainless Steel.

3 How to order

CN-DIN 9 b

Gland type / Size

Packing Size

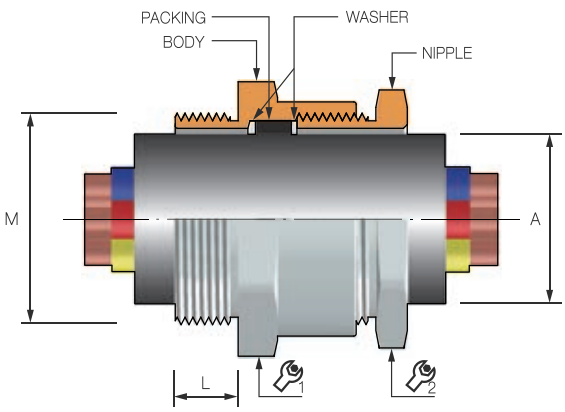

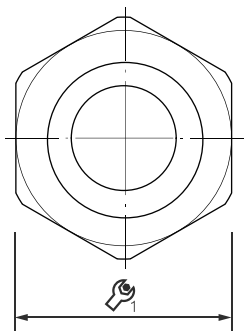

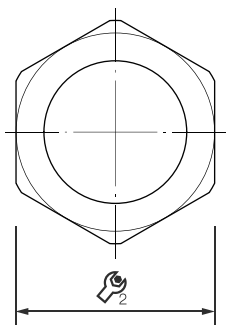

※ The length of the thread can be changed on required.

CN-DIN Type / size	Entry thread Size (M)	Cable Range(A)	Packing I.D				Entry hole(Ø) Size	L	1	2
			a	b	c	d				
DIN-7	PG7	5 ~ 6	6	-	-	-	12.5	6	15	13
DIN-9	PG9	6 ~ 8	7	8	-	-	15.5	7	18	16
DIN-11	PG11	8 ~ 11	9	10	11	-	18.5	7	21	19
DIN-13.5	PG13.5	8 ~ 11	9	10	11	-	20.5	7	24	21
DIN-16	PG16	11 ~ 14	12	13	14	-	23	7	26	24
DIN-21	PG21	14 ~ 17	15	16	17	-	28.5	8	32	30
DIN-29	PG29	17 ~ 23	19	21	23	-	37.5	8	41	38
DIN-36	PG36	23 ~ 31	25	27	29	31	47.5	9	51	48
DIN-42	PG42	31 ~ 37	33	35	37	-	54.5	11	58	55
DIN-48	PG48	37 ~ 43	39	41	43	-	60	11	64	60

Tel. +82-51-264-3538 Fax. +82-51-261-9138 www.connec.kr

ML

ML type cable gland



1 Design specification
DIN 40430, ISO Metric Thread

2 Application
For use with all types of unarmoured cable.
Suitable for fixing wires of machines, electrical applications, mechanical control boards/ boxes.

3 Ingress protection
IP66/68

4 Material
Brass, Brass with Nickel Plated(Standard), Stainless Steel

5 How to order

CN-ML 9 (M16)

Gland type / Size

Entry Thread Size

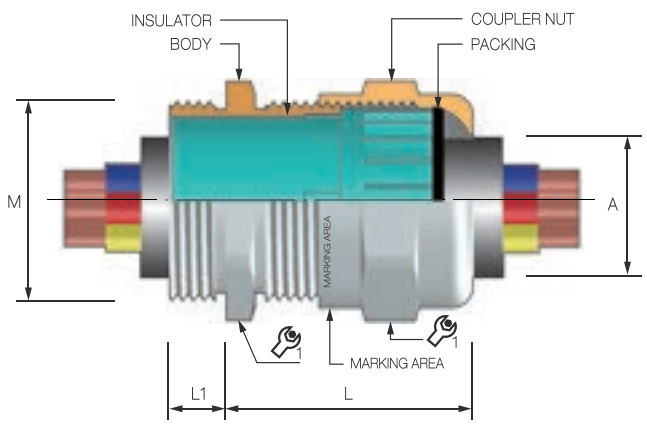

※ The length of the thread can be changed on required.

CN-ML Type / Size	Entry thread size (M)			Cable Range(A)	L	L1	1
	PG	Metric	NPT , PF				
ML-7	7	M12×1.25P	1/4”	3 ~ 6.5	17	6	14
ML-9	9	M16×1.5P	3/8” 1/2”	4 ~ 8.5	20	7	17
NML-11	11	M16×1.5P M20×1.5P	3/8” 1/2”	5 ~ 10.5	21	7.5	20
ML-13.5	13.5	M16×1.5P M20×1.5P	1/2”	7 ~ 12.5	22	7.5	22
ML-16	16	M20×1.5P M25×1.5P	1/2”	10 ~ 14.5	22	7.5	24
ML-21	21	M25×1.5P M32×1.5P	3/4” 1”	13 ~ 18	25.5	8	30
ML-29	29	M32×1.5P M40×1.5P	1” 1-1/4”	18 ~ 24	28.5	9	40
ML-36	36	M40×1.5P M50×1.5P	1-1/4” 2”	24 ~ 33	31	14	50
ML-42	42	M50×1.5P	2”	29 ~ 37.5	33.5	14	57
ML-48	48	M63×1.5P	2”	34 ~ 43	36.5	14	64
ML-52	52	M63×1.5P	2”	43 ~ 55	42	15	78

ML[P]

ML type cable gland [Polyamide]



1 Design specification
DIN 40430, ISO Metric Thread

2 Application
For use with all types of unarmoured cable.
Suitable for fixing wires of machines, electrical applications, mechanical control boards/ boxes.

3 Ingress protection
IP68

4 Material
Polyamide 6.6, UL94 V2

5 Color
Black, Gray, Ivory

6 How to order

CN-ML(P) (11)
- CN-ML(P): Gland type / Size
- (11): Entry Thread Size

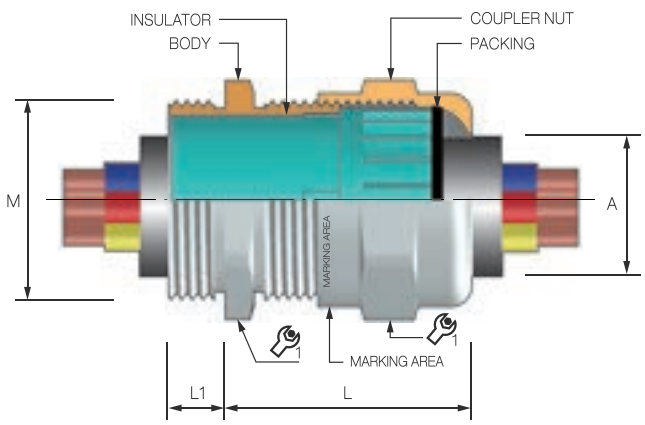

PG Thread Size

CN-ML(P) Type / Size	Entry thread size (M)	Cable Range(A)	Thread Length(L1)	$\wrench_1$	Packing (Pcs/Bag)
ML(P) - 7	PG 7	3 ~ 6.5	8	15	100
ML(P) - 9	PG 9	4 ~ 8	8	19	100
ML(P) - 11	PG 11	5 ~ 10	8	22	100
ML(P) - 13.5	PG 13.5	6 ~ 12	9	24	100
ML(P) - 16	PG 16	10 ~ 14	10	27	100
ML(P) - 21	PG 21	13 ~ 18	11	33	100
ML(P) - 29	PG 29	18 ~ 25	11	42	50
ML(P) - 36	PG 36	22 ~ 32	13	52	50
ML(P) - 42	PG 42	28 ~ 38	14	60	50
ML(P) - 48	PG 48	35 ~ 45	15	65	50

Metric Thread Size

CN-ML(P) Type / Size	Entry thread size (M)	Cable Range(A)	Thread Length(L1)	$\wrench_1$	Packing (Pcs/Bag)
ML(P) - M12	M12	3 ~ 6.5	8	15	100
ML(P) - M16	M16	4 ~ 8	7.5	19	100
ML(P) - M20	M20	10 ~ 14	10	24	100
ML(P) - M25	M25	13 ~ 18	11	33	100
ML(P) - M32	M32	18 ~ 25	10	42	50
ML(P) - M40	M40	22 ~ 32	12	52	50
ML(P) - M50	M50	28 ~ 38	12	60	50
ML(P) - M63	M63	35 ~ 45	15.5	65	50

Tel.+82-51-264-3538 Fax.+82-51-261-9138 www.connec.kr

CW

Armoured cable gland [Single compression]



1 Application

For use with any type of armoured cable. single compression for outer jacket of cable. Use it where is weatherproof and waterproof.

2 Ingress protection

IP66 / 68
The service temperature range is −60℃ to +120℃

3 Material

Brass, Brass with Nickel Plated(Standard), Stainless Steel

4 Accessories

Lock Nut, Gasket, Earth Tag, Shroud, Serrated Washer

5 How to order

{①CNCW ②* ③** ④*** ⑤**** }
Ex) { CNCW 20a NPT3/4" }
①Basic of model ②Type of cable ③Gland size
④Type of entry thread ⑤Entry thread size

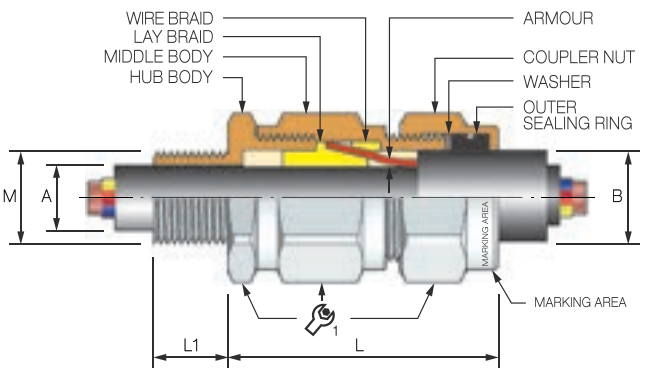

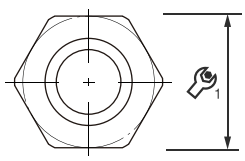

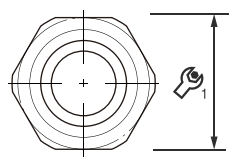

CN-CW Type / Size	Entry thread size (M)		Cable Range(A)	Thread length (L1)			Armour size		1	L
	Metric	NPT , PF	Outer	Metric	PF	NPT	Wire	Braid		
CW-16a	M16 / M20	3/8" / 1/2"	7~12	15	13 / 17	13 / 15	0.8 / 1.25	0.01 / 0.8	25	65
CW-16b	M16 / M20	3/8" / 1/2"	11~15	15	13 / 17	13 / 15	0.8 / 1.25	0.01 / 0.8	25	65
CW-20a	M20 / M25	1/2" / 3/4"	13 ~18	15	17 / 17	15 / 16	0.8 / 1.25	0.01 / 0.8	31	67
CW-20b	M20 / M25	1/2" / 3/4"	17~20	15	17 / 17	15 / 16	0.8 / 1.25	0.01 / 0.8	31	67
CW-25a	M25 / M32	3/4" / 1"	18~23	15	17 / 22	16 / 18	1.25 / 1.6	0.01 / 0.8	36	71
CW-25b	M25 / M32	3/4" / 1"	22~26	15	17 / 22	16 / 18	1.25 / 1.6	0.01 / 0.8	36	71
CW-32a	M32 / M40	1" / 1-1/4"	23~29	15	22 / 22	18 / 19	1.6 / 2.0	0.01 / 0.8	45	77
CW-32b	M32 / M40	1" / 1-1/4"	28~32	15	22 / 22	18 / 19	1.6 / 2.0	0.01 / 0.8	45	77
CW-40a	M40 / M50	1-1/4" / 1-1/2"	32~37	15	22 / 22	19 / 20	1.6 / 2.0	0.01 / 0.8	55	80
CW-40b	M40 / M50	1-1/4" / 1-1/2"	36~41	15	22 / 22	19 / 20	1.6 / 2.0	0.01 / 0.8	55	80
CW-50a	M50 / M63	1-1/2" / 2"	39~45	15	22 / 23	19 / 20	1.8 / 2.5	0.01 / 1.0	68	88
CW-50b	M50 / M63	1-1/2" / 2"	45~50	15	22 / 23	19 / 20	1.8 / 2.5	0.01 / 1.0	68	88
CW-63a	M63/ M75	2" / 2-1/2"	49~55	15	23 / 23	20 / 27	1.8 / 2.5	0.01 / 1.0	82	92
CW-63b	M63/ M75	2-1/2"	54~60	15	23	27	1.8 / 2.5	0.01 / 1.0	82	92
CW-75a	M75 / M90	2-1/2" / 3"	59~65	15	23 / 27	27 / 28	1.8 / 2.5	0.01 / 1.0	98	99
CW-75b	M75 / M90	2-1/2" / 3"	64~70	15	23 / 27	27 / 28	1.8 / 2.5	0.01 / 1.0	98	99
CW-75c	M75 / M90	2-1/2" / 3"	70~76	15	23 / 27	27 / 28	1.8 / 2.5	0.01 / 1.0	98	99
CW-90a	M90 / M100	3" / 3-1/2"	74~80	20	27 / 28	28 / 30	2.0 / 3.5	0.01 / 1.0	110	105
CW-90b	M90 / M100	3" / 3-1/2"	79~85	20	27 / 28	28 / 30	2.0 / 3.5	0.01 / 1.0	110	105
CW-90c	M90 / M100	3" / 3-1/2"	84~90	20	27 / 28	28 / 30	2.0 / 3.5	0.01 / 1.0	110	105
CW-100a	M100	3-1/2" / 4"	89~93	20	28 / 28	30 / 31	2.0 / 3.5	0.01 / 1.0	120	107
CW-100b	M100	3-1/2" / 4"	93~98	20	28 / 28	30 / 31	2.0 / 3.5	0.01 / 1.0	120	107

A2F[EF]

Flexible connect cable gland

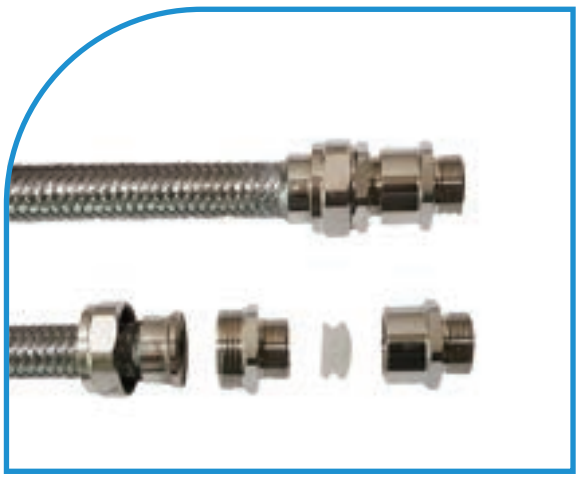

1 Design specification
BS 6121, IEC 62444, EN 50262

2 Application
For use with all types of unarmoured and braided cable.
Single compression for jacket of cable.
Used in conjunction with CNEF to protect exposed wires.

3 Material
Flexible part : Stainless Steel
Connector part : Brass with Nickel Plated(Standard), Stainless Steel

4 Acceesories
Lock Nut, Gasket

5 How to order

CN-A2F(EF) 20b / NPT1/2"
Gland type / Size — Entry Thread Size

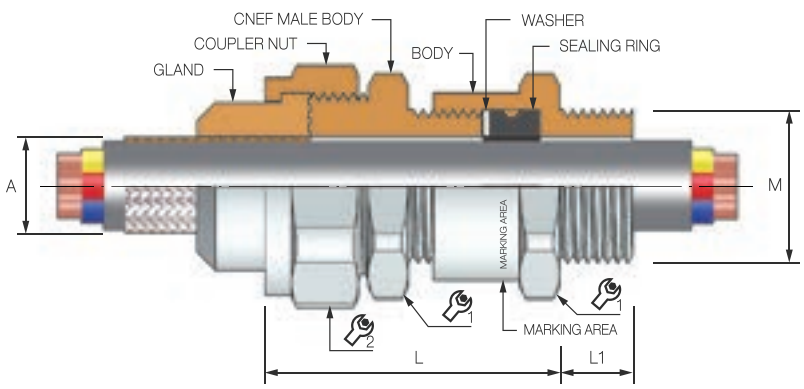

CN-A2F(EF) Type / Size	Entry thread size (M)		Cable Range(A)	Thread length (L1)			W_1	W_2	L
	Metric	NPT, PF		Metric	PF	NPT			
A2F(EF)-16a	M16 / M20	3/8“ / 1/2”	4 ~ 8	15	13 / 17	13 / 15	22	25	35
A2F(EF)-16b	M16 / M20	3/8“ / 1/2”	7 ~ 10	15	13 / 17	13 / 15	22	25	35
A2F(EF)-20a	M20 / M25	1/2“ / 3/4”	7 ~ 10	15	17 / 17	15 / 16	27	30	36
A2F(EF)-20b	M20 / M25	1/2“ / 3/4”	8 ~ 13	15	17 / 17	15 / 16	27	30	36
A2F(EF)-25a	M25 / M32	3/4“ / 1”	13 ~ 17	15	17 / 22	16 / 18	32	38	37
A2F(EF)-25b	M25 / M32	3/4“ / 1”	15 ~ 19	15	17 / 22	16 / 18	32	38	37
A2F(EF)-32a	M32 / M40	1“ / 1-1/4”	18 ~ 23	15	22 / 22	18 / 19	39	46	43
A2F(EF)-32b	M32 / M40	1“ / 1-1/4”	22 ~ 25	15	22 / 22	18 / 19	39	46	43
A2F(EF)-40a	M40 / M50	1-1/4“ / 1-1/2”	24 ~ 29	15	22 / 22	19	48	54	45
A2F(EF)-40b	M40 / M50	1-1/4“ / 1-1/2”	28 ~32	15	22 / 22	19	48	54	45
A2F(EF)-50a	M50 / M63	1-1/2“ / 2”	31 ~ 36	15	22 / 23	19 / 20	58	60	50
A2F(EF)-50b	M50 / M63	1-1/2“ / 2”	35 ~ 39	15	22 / 23	19 / 20	58	60	50
A2F(EF)-63a	M63/ M75	2“ / 2-1/2”	39 ~ 46	15	22 / 23	20 / 27	73	73	52
A2F(EF)-63b	M63/ M75	2“ / 2-1/2”	45 ~ 51	15	22 / 23	20 / 27	73	73	52
A2F(EF)-75a	M75 / M90	2-1/2“ / 3”	51 ~ 58	15	23 / 27	27 / 28	85	90	60
A2F(EF)-75b	M75 / M90	2-1/2“ / 3”	58 ~ 63	15	23 / 27	27 / 28	85	90	60
A2F(EF)-75c	M75 / M90	2-1/2“ / 3”	62 ~ 65	15	23 / 27	27 / 28	85	90	60
A2F(EF)-90a	M90 / M100	3“ / 3-1/2”	64 ~ 69	20	27 / 28	28 / 30	100	102	62
A2F(EF)-90b	M90 / M100	3“ / 3-1/2”	68 ~ 73	20	27 / 28	28 / 30	100	102	62
A2F(EF)-90c	M90 / M100	3“ / 3-1/2”	72 ~ 75	20	27 / 28	28 / 30	100	102	62
A2F(EF)-100a	M100	3-1/2“ / 4”	76 ~ 81	20	28	30 / 31	112	130	68
A2F(EF)-100b	M100	3-1/2“ / 4”	80 ~ 85	20	28	30 / 31	112	130	68
A2F(EF)-100c	M100	3-1/2“ / 4”	84 ~ 89	20	28	30 / 31	112	130	68

Tel. +82-51-264-3538 Fax. +82-51-261-9138 www.connec.kr

A2F[SG]

Flexible connect cable gland

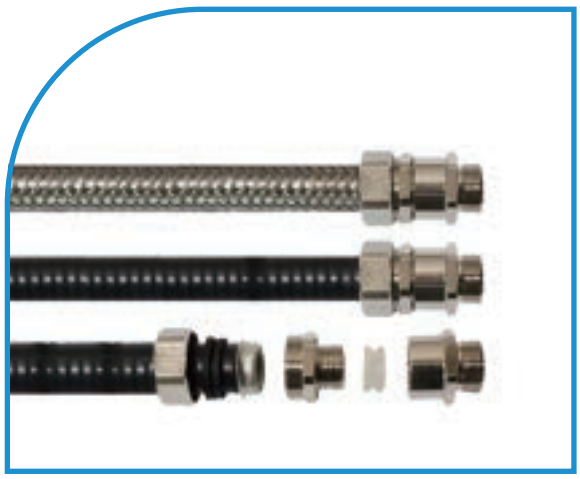

1 Design specification
BS 6121, IEC 62444, EN 50262

2 Application
For use with all types of unarmoured and braided cable.
Single compression for jacket of cable.
Used in conjunction with CNSG to protect exposed wires.

3 Material
Flexible part : Stainless Steel or PVC Jacket
Connector part : Brass with Nickel Plated(Standard), Stainless Steel

4 Acceesories
Lock Nut, Gasket

5 How to order

CN-A2F(SG) 20b / PF1/2"
Gland type / Size — Entry Thread Size

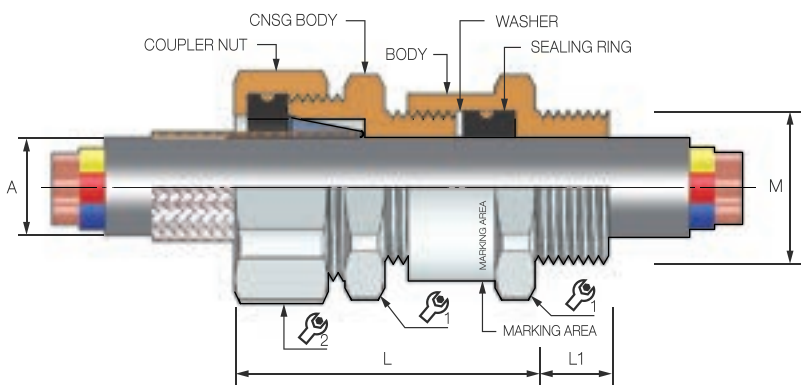

CN-A2F(SG) Type /Size	Entry thread size (M)		Cable Range(A)	Thread length (L1)			W_1	W_2	L
	Metric	NPT, PF		Metric	PF	NPT			
A2F(SG)-16a	M16 / M20	3/8“ / 1/2”	4 ~ 8	15	13 / 17	13 / 15	22	25	37
A2F(SG)-16b	M16 / M20	3/8“ / 1/2”	7 ~ 10	15	13 / 17	13 / 15	22	25	37
A2F(SG)-20a	M20 / M25	1/2“ / 3/4”	7 ~ 10	15	17 / 17	15 / 16	27	29	39
A2F(SG)-20b	M20 / M25	1/2“ / 3/4”	9 ~ 13	15	17 / 17	15 / 16	27	29	39
A2F(SG)-25a	M25 / M32	3/4“ / 1”	13 ~ 17	15	17 / 22	16 / 18	32	33	42
A2F(SG)-25b	M25 / M32	3/4“ / 1”	16 ~ 19	15	17 / 22	16 / 18	32	33	42
A2F(SG)-32a	M32 / M40	1“ / 1-1/4”	18 ~ 23	15	22 / 22	18 / 19	39	41	46
A2F(SG)-32b	M32 / M40	1“ / 1-1/4”	22 ~ 25	15	22 / 22	18 / 19	39	41	46
A2F(SG)-40a	M40 / M50	1-1/4“ / 1-1/2”	24 ~ 29	15	22 / 22	19	48	50	50
A2F(SG)-40b	M40 / M50	1-1/4“ / 1-1/2”	28 ~32	15	22 / 22	19	48	50	50
A2F(SG)-50a	M50 / M63	1-1/2“ / 2”	31 ~ 37	15	22 / 23	19 / 20	58	56	53
A2F(SG)-50b	M50 / M63	2-1/2“ / 2”	36 ~ 39	15	22 / 23	19 / 20	58	56	53
A2F(SG)-63a	M63/ M75	2“ / 2-1/2”	39 ~ 46	15	23 / 23	20 / 27	73	68	58
A2F(SG)-63b	M63/ M75	2-1/2”	45 ~ 50	15	23	27	73	68	58
A2F(SG)-75a	M75 / M90	2-1/2“ / 3”	50 ~ 56	15	23 / 27	27 / 28	85	85	63
A2F(SG)-75b	M75 / M90	2-1/2“ / 3”	55 ~ 61	15	23 / 27	27 / 28	85	85	63
A2F(SG)-90a	M90 / M100	3“ / 3-1/2”	61 ~ 69	20	27 / 28	28 / 30	100	102	67
A2F(SG)-90b	M90 / M100	3“ / 3-1/2”	68 ~ 75	20	27 / 28	28 / 30	100	102	67
A2F(SG)-100a	M100	3-1/2“ / 4”	74 ~ 81	20	28	30 / 31	125	130	70
A2F(SG)-100b	M100	3-1/2“ / 4”	80 ~ 85	20	28	30 / 31	125	130	70
A2F(SG)-100c	M100	3-1/2“ / 4”	84 ~ 89	20	28	30 / 31	125	130	70

Tel. 051-264-3538 Fax. 051-261-9138 www.connec.kr



FITTING & ACCESSORIES

Connector / Elbo / Nipple / Coupling / Shroud / Earth tag / Gasket / Lock nut / Serrated washer / Plug / Breather Drain

CONNECTOR

CN-SG / CN-PG



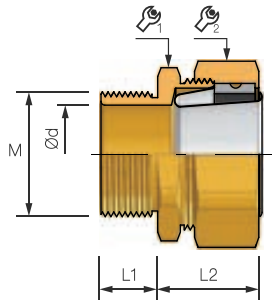

1 Application
Grab the tube with the insides of the connector.
The inner ear is strong and protects the cut surface of the tube and maintains the inner diameter of the tube.

2 Certificate
KS C 8459

3 Material
Brass, Acid-Treated brass(Standard),
Brass with Nickel plated

CN-SG Male connector

CN-SG Type / Size		Entry thread size(M)		1	2	Ød	L1	L2
		PF , NPT	Metric					
SG	10	1/2"	20	27	25	10	12	20
	12	1/2"	20	27	27	12.5	12	21
	16	1/2"	20	29	31.5	15.5	12	22
	22	3/4"	25	33	36	20.8	13	22
	28	1"	32	41	44	26	16	27
	36	1-1/4"	40	50	54	35	16	28
	42	1-1/2"	50	56	59	40	16	31
	54	2"	63	68	73	51	18	32
	70	2-1/2"	75	85	85	63	20	34
	82	3"	90	102	107	77	24	37
	104	4"	110	131	136	100	26	45



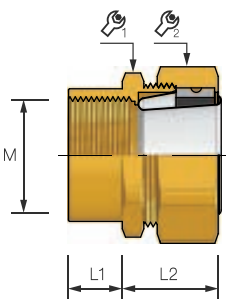

1 Application
Screw connection type that can be connected to various pipes.

2 Certificate
KS C 8459

3 Material
Brass, Acid-Treated brass(Standard),
Brass with Nickel plated

CN-PG Female connector

CN-PG Type / Size		Entry thread size(M)		1	2	L1	L2	Pipe connection size
		PF , NPT	Metric					
PG	10	1/2"	20	24	25	13	20	16C
	12	1/2"	20	27	27	13	20	16C
	16	1/2"	20	29	31.5	14	22	16C
	22	3/4"	25	33	36	16	27	22C
	28	1"	32	41	44	18	28	28C
	36	1-1/4"	40	50	54	18	24	36C
	42	1-1/2"	50	56	59	20	32	42C
	54	2"	63	68	73	24	33	54C
	70	2-1/2"	75	85	85	24	34	70C
	82	3"	90	102	107	24	38	82C
	104	4"	110	129	136	24	38	104C

ELBOW

CN-EB



❶ Application

Provide means threaded and set-screw type conduit bodies for pulling, splicing and maintaining wires installed in rigid conduit.

❷ Material

Brass, Brass with Nickel Plated(Standard), Stainless Steel

❸ Acceesories

Lock Nut, Gasket

❹ How to order

CN-EB MF NPT1/2" * M20

- CN-EB: Basic of model
- MF: Type of Elbo
- NPT1/2" * M20: Entry Thread

MF Type

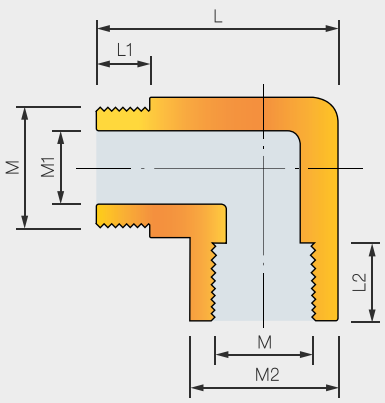

MM Type

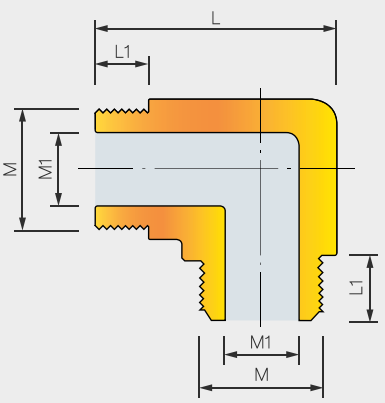

FF Type

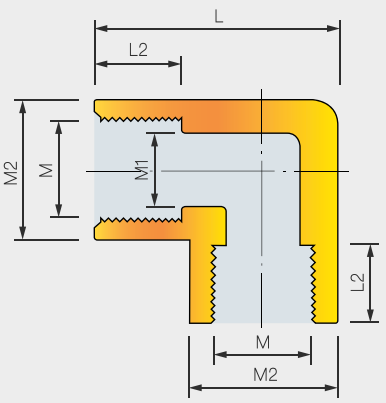

CN-EB Type / Size	M			M1	L1			L2			M2	L
	PF	NPT	Metric		PF	NPT	Metric	PF	NPT	Metric		
EB 16	3/8"	3/8"	16X1.5	10	15	13	15	16	16	16	24	42
EB 20	1/2"	1/2"	20X1.5	15	15	15	15	17	17	17	27	44
EB 25	3/4"	3/4"	25X1.5	20	17	16	15	17	17	17	32	52
EB 32	1"	1"	32X1.5	25	18	18	15	20	20	17	43	67
EB 40	1-1/4"	1-1/4"	40X1.5	34	19	19	15	22	22	17	54	80
EB 50	1-1/2"	1-1/2"	50X1.5	39	19	19	15	22	22	17	62	87
EB 63	2"	2"	63X1.5	50	26	29	15	28	25	18	76	108
EB 75	2-1/2"	2-1/2"	75X1.5	65	28	28	15	30	30	18	105	113

Tel. +82-51-264-3538 Fax. +82-51-261-9138 www.connec.kr

SHORT NIPPLE / COUPLING

CN-SN / CN-CP



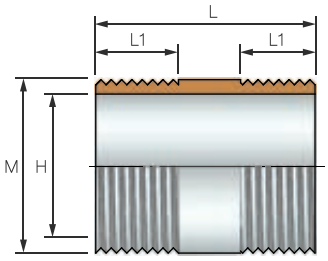

1 Material
Electro galvanized steel(Standard) Stainless Steel, Brass with Nickel Plated

CN-SN

CN-SN Type / Size	M PF , NPT	H	L1	L
16	1/2"	16	17	44
22	3/4"	21	17	44
28	1"	27	20	55
36	1-1/4"	35	20	55
42	1-1/2"	41	20	55
54	2"	51	25	60
70	2-1/2"	66	27	65
82	3"	80	30	80
104	4"	103	35	90

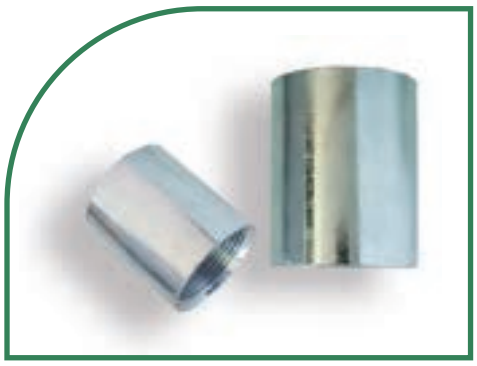

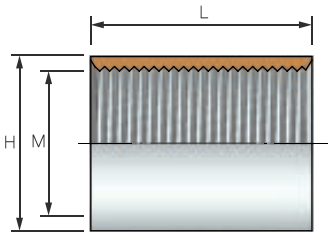

1 Material
Electro galvanized steel(Standard) Stainless Steel, Brass with Nickel Plated

CN-CP

CN-CP Type / Size	M PF , NPT	H	L
16	1/2"	25	38
22	3/4"	31	44
28	1"	37	50
36	1-1/4"	47	56
42	1-1/2"	55	56
54	2"	58	64
70	2-1/2"	84	72
82	3"	97	80
104	4"	123	90

SHROUD / EARTH TAG / GASKET

CN-SH / CN-ET / CN-GK

CN-SH (Shroud)



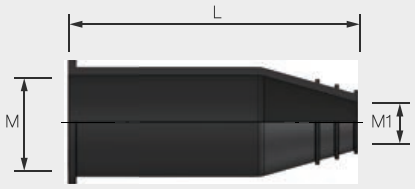

CN-SH Type / Size	CNSH-A			CNSH-W		
	M	M1	L	M	M1	L
SH-16	22	6	58	27	10	82
SH-20	27	12	60	33	15	95
SH-25	32	17	60	38	16	96
SH-32	39	22	62	48	20	105
SH-40	48	28	62	58	27	108
SH-50	58	36	65	73	30	126
SH-63	73	46	70	88	39	135
SH-75	85	59	72	106	42	145
SH-90	100	68	75	118	55	155
SH-100	112	80	80	128	80	158

CN-ET (Earth Tag)



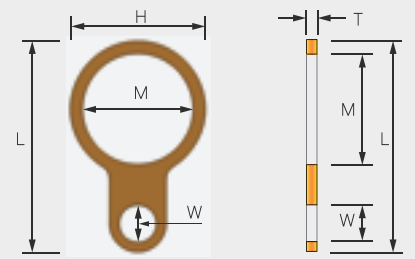

CN-ET Type / Size	Thread Size		H	M	T	L	W
	PF,NPT	Metric					
ET-16	3/8"	M16	23	17	1.5	49	6
ET-20	1/2"	M20	30	21.5	1.5	56	7
ET-25	3/4"	M25	35	27	1.5	62	8
ET-32	1"	M32	44	33.5	1.5	74	12
ET-40	1-1/4"	M40	52	42	1.5	81	14
ET-50	1-1/2"	M50	63	50.5	1.5	101	14
ET-63	2"	M63	78	64	1.5	118	14
ET-75	2-1/2"	M75	92	76	1.5	131	14
ET-90	3"	M90	109	91	1.5	162	15
ET-100	3-1/2"	M100	120	101	1.5	177	15
ET-115	4"	M115	134	116	1.5	190	15

CN-GK (Gasket)



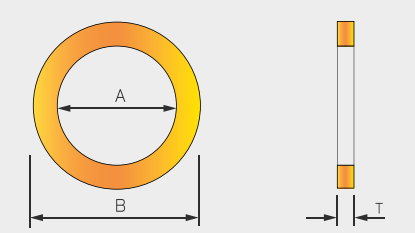

CN-GK Type / Size	A2F		E1F		T
	A	B	A	B	
GK-16	16	22	16	25	2
GK-20	20	27	20	31	2
GK-25	25	32	25	36	2
GK-32	32	39	32	45	2
GK-40	40	48	40	55	2
GK-50	50	58	50	68	2
GK-63	63	73	63	82	2
GK-75	75	85	75	98	2
GK-90	90	100	90	110	2
GK-100	100	112	100	120	2

Tel. +82-51-264-3538 Fax. +82-51-261-9138 www.connec.kr

LOCK NUT / SERRATED WASHER

CN-LN / CN-TW

CN-LN (Lock Nut)



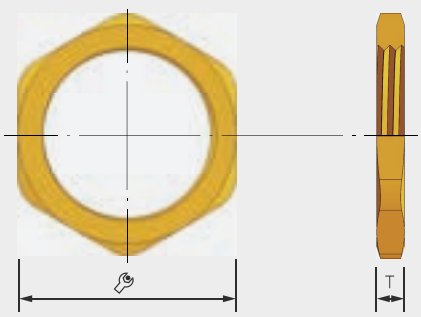

CN-LN Type / Size	PT/NPT Thread Size		CN-LN Type / Size	Metric Thread Size	
	🔧	T		🔧	T
LN - 3/8"	22	4.5	LN - M16	22	4.5
LN - 1/2"	27	4.5	LN - M20	27	4.5
LN - 3/4"	32	5	LN - M25	32	5
NLN - 1"	39	5	LN - M32	39	5
LN - 1-1/4"	48	6	LN - M40	48	6
LN - 1-1/2"	58	6	LN - M50	58	6
LN - 2"	73	7	LN - M63	73	7
LN - 2-1/2"	85	8	LN - M75	85	8
LN - 3"	100	9	LN - M90	100	9
LN - 3-1/2"	112	10	LN - M100	112	10
LN - 4"	128	10	LN - M115	128	10

CN-LN Type / Size	PG Thread		CN-LN Type / Size	Metric Thread	
	🔧	T		🔧	T
LN - PG7	15	3	LNPG-M12	15	3
LN - PG9	18	3	LNPG-M16	19	3
LN - PG11	21	3	LNPG-M20	24	3.5
LN - PG13.5	23	3.5	LNPG-M25	30	3.5
LN - PG16	26	4	LNPG-M32	36	4.5
LN - PG21	32	4	LNPG-M40	46	4.5
LN - PG29	41	5	LNPG-M50	60	5.5
LN - PG36	51	5	LNPG-M63	70	6
LN - PG42	58	6	-	-	-
LN - PG48	66	6	-	-	-

CN-TW (Teeth Washer)



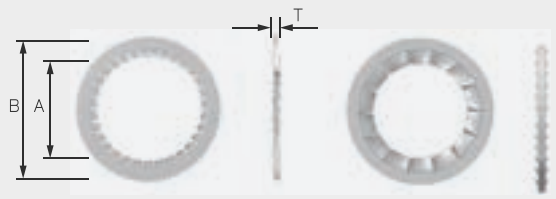

CN-TW Type /Size	Metric Thread			CN-ML Type / Size	PF,NPT Thread		
	A	B	T		A	B	T
TW-M16	17	25	1.5	TW - 3/8"	17	25	1.5
TW-M20	21	31	1.5	TW - 1/2"	21	31	1.5
TW-M25	26	36	1.5	TW - 3/4"	26	36	1.5
TW-M32	33	47	1.5	TW - 1"	33	47	1.5
TW-M40	42	55	1.5	TW - 1-1/4"	42	55	1.5
TW-M50	51	70	1.5	TW - 1-1/2"	48	70	1.5
TW-M63	64	84	1.5	TW- 2"	61	84	1.5
TW-M75	76	98	1.5	TW- 2-1/2"	76	98	1.5
TW-M90	91	110	1.5	TW- 3"	89	110	1.5
CNTW-M100	101	120	1.5	TW - 4"	115	120	1.5

PLUG / DRAIN PLUG

CN-PL / CN-PL(R) / CN-BD

CN-PL(Plug)

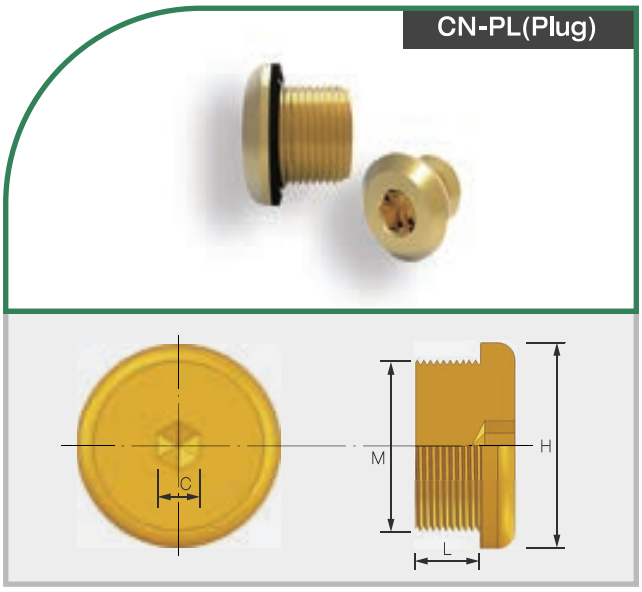

CN-PL Type / Size	M		L		Pitch	H	C
	Metric	PF/NPT	Metric	PF/NPT			
PL-16	16	3/8"	15	13	1.5	22	8
PL-20	20	1/2"	15	15	1.5	26	10
PL-25	25	3/4"	15	16	1.5	32	10
PL-32	32	1"	15	18	1.5	39	10
PL-40	40	1-1/4"	15	19	1.5	48	10
PL-50	50	1-1/2"	15	19	1.5	58	10
PL-63	63	2"	15	19	1.5	73	10
PL-75	75	2-1/2"	15	28	1.5	85	10
PL-90	90	3"	15	30	2.0	100	10
PL-100	100	3-1/2"	15	31	2.0	112	10
PL-115	115	4"	15	31	2.0	128	10

CN-PL(Plug)

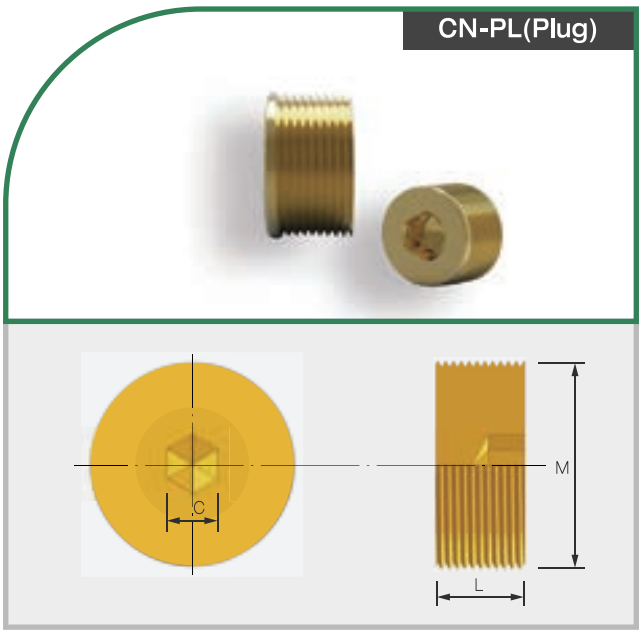

CN-PL(R) Type / Size	M		L		Pitch	C
	Metric	PF/NPT	Metric	PF/NPT		
PL(R)-16	16	3/8"	17	15	1.5	8
PL(R)-20	20	1/2"	17	17	1.5	10
PL(R)-25	25	3/4"	17	18	1.5	10
PL(R)-32	32	1"	17	21	1.5	10
PL(R)-40	40	1-1/4"	17	21	1.5	10
PL(R)-50	50	1-1/2"	17	21	1.5	10
PL(R)-63	63	2"	17	21	1.5	10
PL(R)-75	75	2-1/2"	17	30	1.5	10
PL(R)-90	90	3"	17	32	2.0	10
PL(R)-100	100	3-1/2"	17	33	2.0	10
PL(R)-115	115	4"	17	33	2.0	10

CN–BD(Breather Drain)

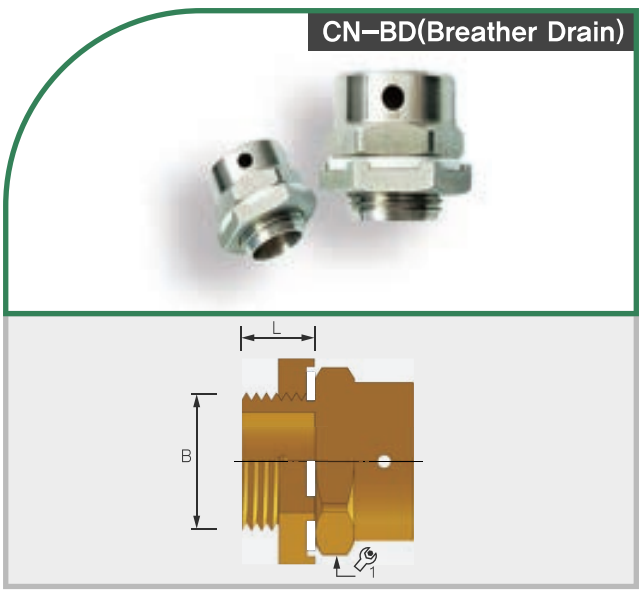

CN-BD Type / Size	B		L		1
	PF/NPT	Metric	PF/NPT	Metric	
BD-20	1/2"	M20×1.5P	17/15	15	25
BD-25	3/4"	M25×1.5P	17/16	15	30

Tel. +82-51-264-3538 Fax. +82-51-261-9138 www.connec.kr

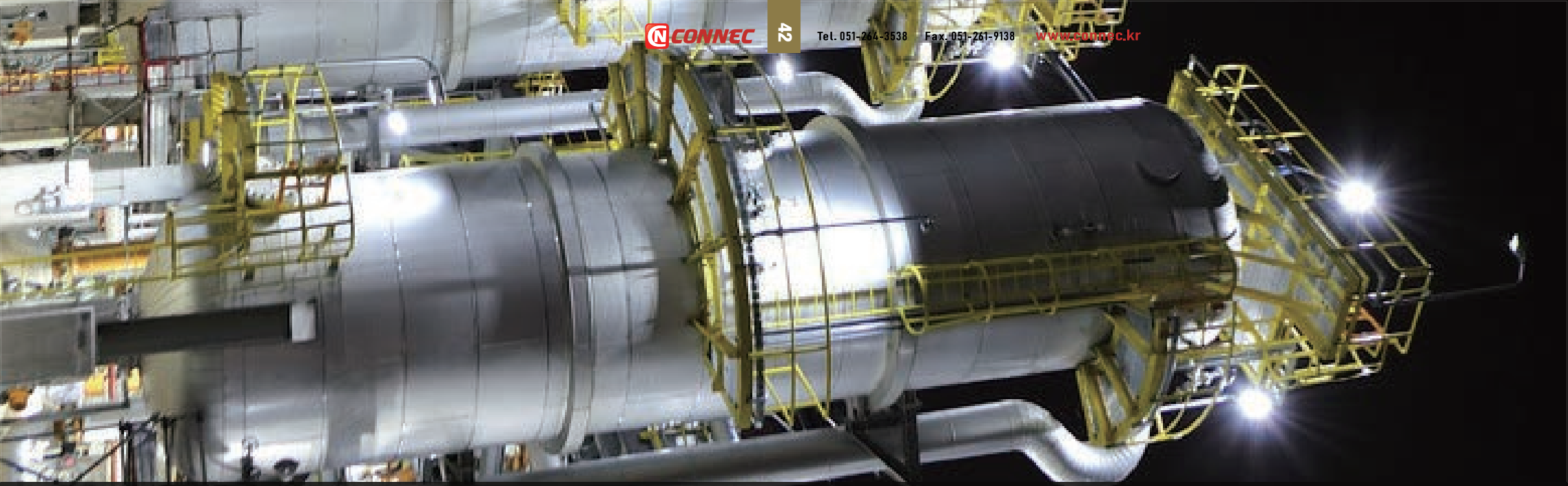

JUNCTION BOX

Small type / Stainless steel / GRP type / Aluminium EX



SMALL TYPE JUNCTION BOX

CN-JB 002 / CN-JB 003

CN-JB 002





Material	Body & Cover : ABS Cable Gland : Brass
Protection degree	IP56
Terminal block	Shark type terminal block (Cage-clamp type) Earth terminal block (Yellow/Green)
Standard finishes	Body and cover electrostatic powder

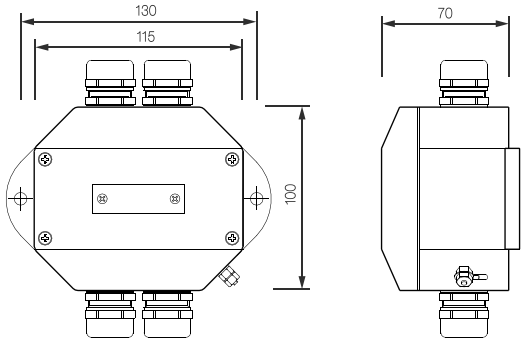

CN-JB 003





Material	Body & Cover : ABS or RESIN Cable Gland : Brass
Protection degree	IP67
Terminal block	Shark type terminal block (Cage-clamp type) Earth terminal block (Yellow/Green)
Standard finishes	Body and cover electrostatic powder

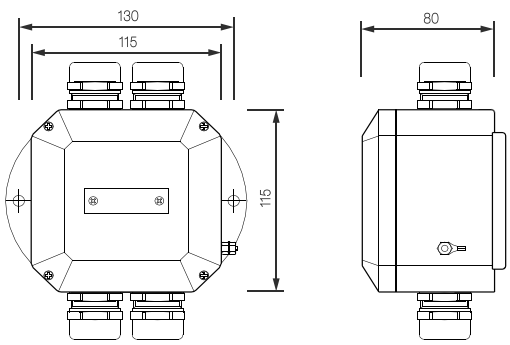

SMALL TYPE JUNCTION BOX

CN-JB 002A / CN-JB 003A

CN-JB 002A



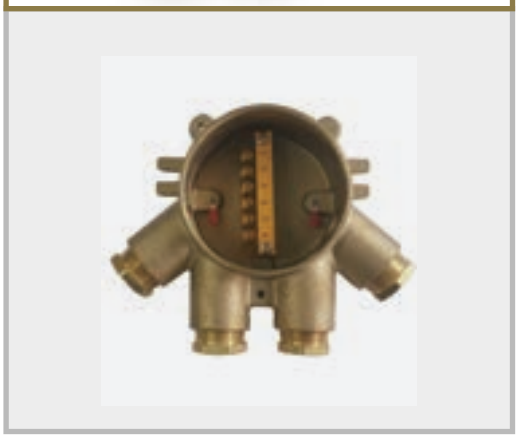

Material	Body & Cover : Cast brass Cable Gland : Brass
Protection degree	IP56
Standard finishes	Body and cover electrostatic powder

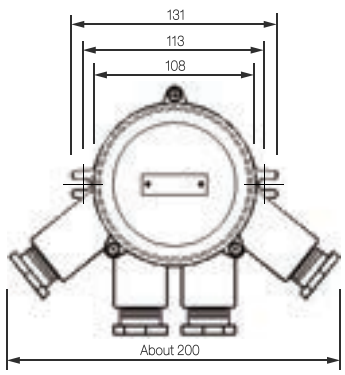

CN-JB 003A





Material	Body & Cover : Cast brass Cable Gland : Brass
Protection degree	IP56
Standard finishes	Body and cover electrostatic powder

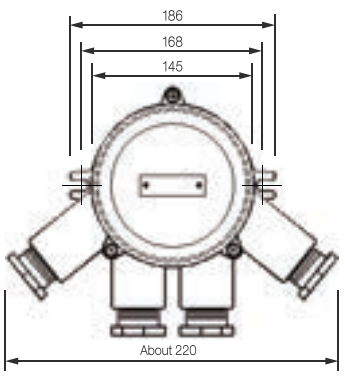

STAINLESS STEEL JUNCTION BOX

CN-JBE / CN-JBU



CN-JBE / JBU

Protection degree		IP66
Material	Body	2.0mm SUS316L Stainless steel
	Cover	2.0mm SUS316L Stainless steel
	Gland Plate	3.0mm SUS316L Stainless steel
Type of Protection		Ex eb IIC T6 Gb
Ambient Temperature		-40℃ ≤ Ta ≤ 40℃
Finish		Electrochemical Polished or Painting

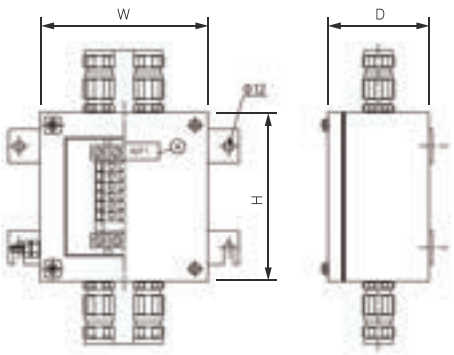

CN-JBE / JBU Type / Size		WIDTH(W)	HEIGHT(H)	DEPTH1(D)	DEPTH2(D)	DEPTH3(D)
JBE / JBU - 1200	-	120	120	100	-	-
JBE / JBU - 1500	1501	150	150	125	-	-
JBE / JBU - 2000	2001	200	200	125	165	-
JBE / JBU - 2500	2501	250	300	165	225	-
JBE / JBU - 3000	3001	300	300	165	225	-
JBE / JBU - 3500	3501	350	500	165	225	-
JBE / JBU - 4000	4001	400	400	165	225	-
JBE / JBU - 5000	5001	500	500	165	225	-
JBE / JBU - 5100	5101	510	780	165	225	325
JBE / JBU - 6500	6501	650	950	165	225	325
JBE / JBU - 8000	8001	800	1250	165	225	325

CN-JBE - : Exe JUNCTION BOX

CN-JBU - : EMPTY BOX

Ex) CN - JBE - 150 0

JBU - 1 : GLAND PLATE TYPE

Tel. +82-51-264-3538 Fax. +82-51-261-9138 www.connec.kr

GRP JUNCTION BOX

CN-GRP



IECEx VTT 14.0013U / VTT 14 ATEX 072U
IECEx VTT 15.0001X / VTT 15 ATEX 001X
KCs Ex e IIC T4/T5 /
KCs Ex tb IIC T100℃/T135℃

CN-GRP

Protection degree		IP67
Material	Body	Glass Reinforced Polyester
	Cover	Glass Reinforced Polyester
	Gland Plate	Glass Reinforced Polyester
Type of Protection		Ex e IIC (T4,T5), Ex tb IIIC
Ambient Temperature		-40℃ ≤ Ta ≤ 80℃
Color		PNX/PNTX : Black / PEX : RAL 7001

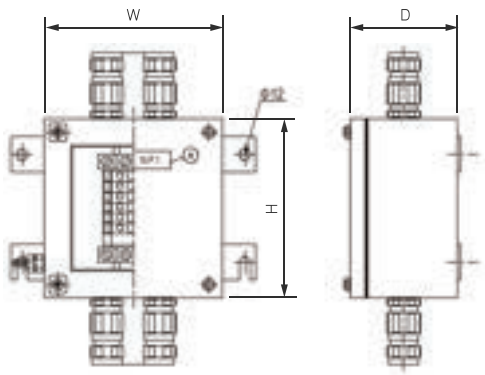

CN-GRP Type / Size		WIDTH(W)	HEIGHT(H)	DEPTH(D)	INTERNAL DEPTH
EMPTY BOX	JUNCTION BOX				
PNX 080806	PNTX 080806	75	80	55	42.5
PNX 081606	PNTX 081606	75	160	55	41.9
PNX 121209	PNTX 121209	123	125	95	75.5
PNX 122209	PNTX 122209	124	224	93	74.5
PNX 161609	PNTX 161609	160	161	91	75
PNX 162609	PNTX 162609	160	260	90	74.1
PEX 081106	-	75	110	55	47
PEX 081906	-	75	190	55	47
PEX 163609	-	160	361	90	75
PEX 252612	-	251	256	120	105
PEX 254012	-	250	402	120	105
PEX 404012	-	401	406	120	105

ALUMINIUM EX JUNCTION BOX

CN-AL

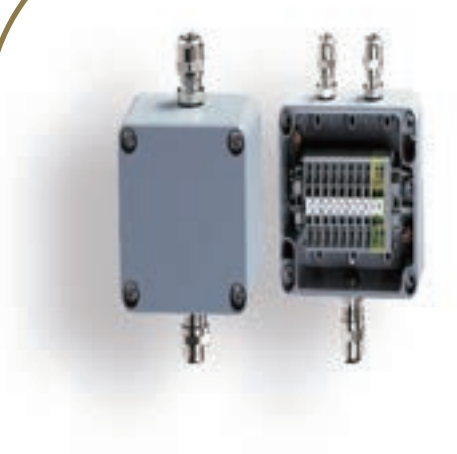

IECEx ITS 11.0031U / ITS 11 ATEX 37277U
IECEx ITS 12.0019X / ITS 12 ATEX 37526X
KCs Ex e IIC T4/T5 IP66

CN-AL

Protection degree		ALX : IP54, ALNX/ALNTX : IP66
Material	Body	DIE CAST ALUMINIUM ADC 12
	Cover	DIE CAST ALUMINIUM ADC 12
	Gland plate	DIE CAST ALUMINIUM ADC 12
Type of Protection		Ex e IIC (T4,T5), Ex tb IIIC
Ambient Temperature		-55℃ ≤ Ta ≤ 80℃
Color		RAL 7001

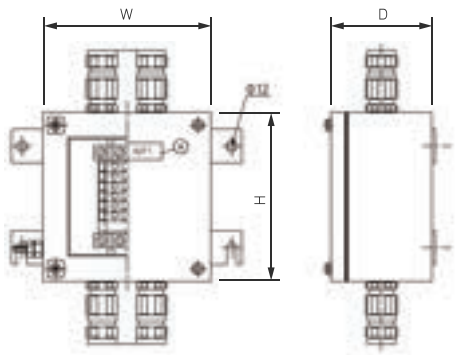

CN-AL Type / Size		WIDTH(W)	HEIGHT(H)	DEPTH(D)	INTERNAL DEPTH
EMPTY BOX	JUNCTION BOX				
ALNX 121208	ALNTX 121208	125	124	81	64
ALNX 122208	ALNTX 122208	222	125	81	64
ALNX 161609	ALNTX 161609	163	162	91	74
ALNX 162609	ALNTX 162609	262	162	91	74
ALNX 163609	ALNTX 163609	362	162	91	74
ALNX 232011	ALNTX 232011	230	200	110	93
ALX 232018	-	230	200	180	163
ALNX 232811	ALNTX 232811	280	230	110	93
ALNX 233311	ALNTX 233311	330	230	110	93
ALNX 233318	ALNTX 233318	330	230	180	163
ALX 234011	-	401	230	110	93
ALNX 234018	ALNTX 234018	401	230	180	163
ALX 236011	-	600	230	110	90
ALNX 314011	ALNTX 314011	403	310	110	93
ALNX 314018	ALNTX 314018	403	310	180	163
ALNX 316011	ALNTX 316011	600	310	110	93
ALNX 316018	ALNTX 316018	600	310	180	163

TECHNICAL INFORMATION

Basic of explosion protection / Marking / Thread

Classification of Zones

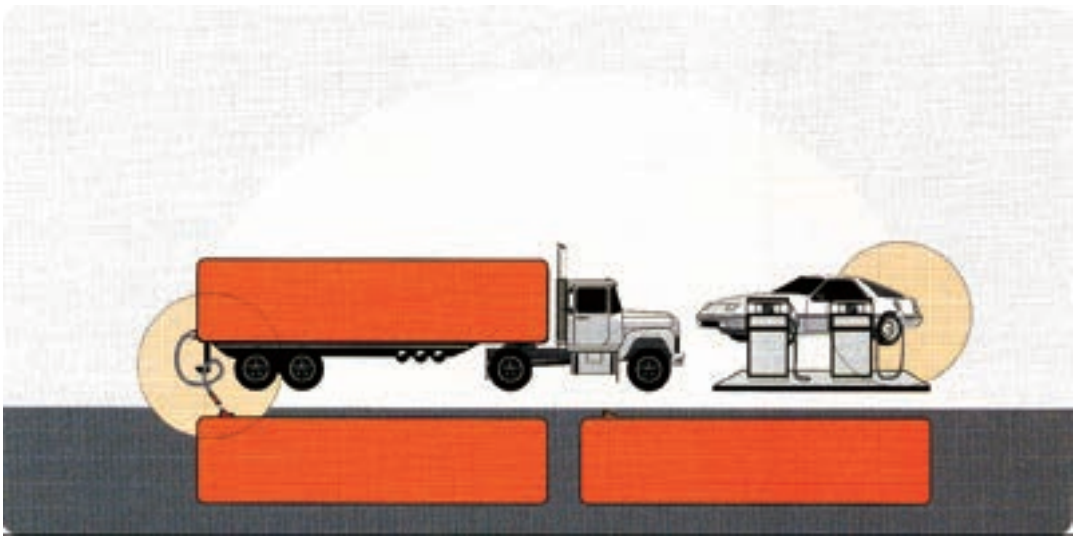

Classification of hazardous places

Zone 0 A place in which an explosive atmosphere consisting of a mixture with air of flammable substances in theform of gas, vapour or mist is present continuously or for long periods or frequently.

Zone 1 A place in which an explosive atmosphere consisting of a mixture with air of flammable substances in theform of gas, vapour or mist is likely to occurnin normal operation occasionally.

Zone 2 A place in which an explosive atmosphere consisting of a mixture with air of flammable substances in theform of gas, vapour or mist is likely to occurnin normal operation but, if it does occur, will persist for a short period only.

Zone 20 Zone 20 A place in which an explosive atmosphere in the form of a cloud of combustible dust in air is present continuously or for long periods or frequently.

Zone 21 Zone 21 A place in which an explosive atmosphere in the form of a cloud of combustible dust in air is likely to occur in normal operation occasionally.

Zone 22 Zone 22 A place in which an explosive atmosphere in the form of a cloud of combustible dust in air is not likely to occur in normal operation but, if it does occur, will persist for a short period only.

Note :

1. Layers, deposits and heaps of combustible must be considered as any other source which can form an explosive atmosphere.
2. 'Normal operation' means the situation when installations are used within their design parameters.
3. The definitions comply with the EC directive, in the HSE occupational safety regulations, hazardous esplosive atmospheres are defined.
   in according with EN 1127-1

   Section 3.17 defines potentially explosive atmospheres as follows: Mixture of air and flmmable gases, vapours, fogs and dusts under atmospheric conditions due to a transmission of the burning process to the entire unburned mixture after inflammation

   Section 3.17 defines hazardous potentially explosive atmospheres as follows: Potentially explosive atmoshere Which will lead to damage in case of explosion.

Tel. +82-51-264-3538 Fax. +82-51-261-9138 www.connec.kr

Classification of Zones

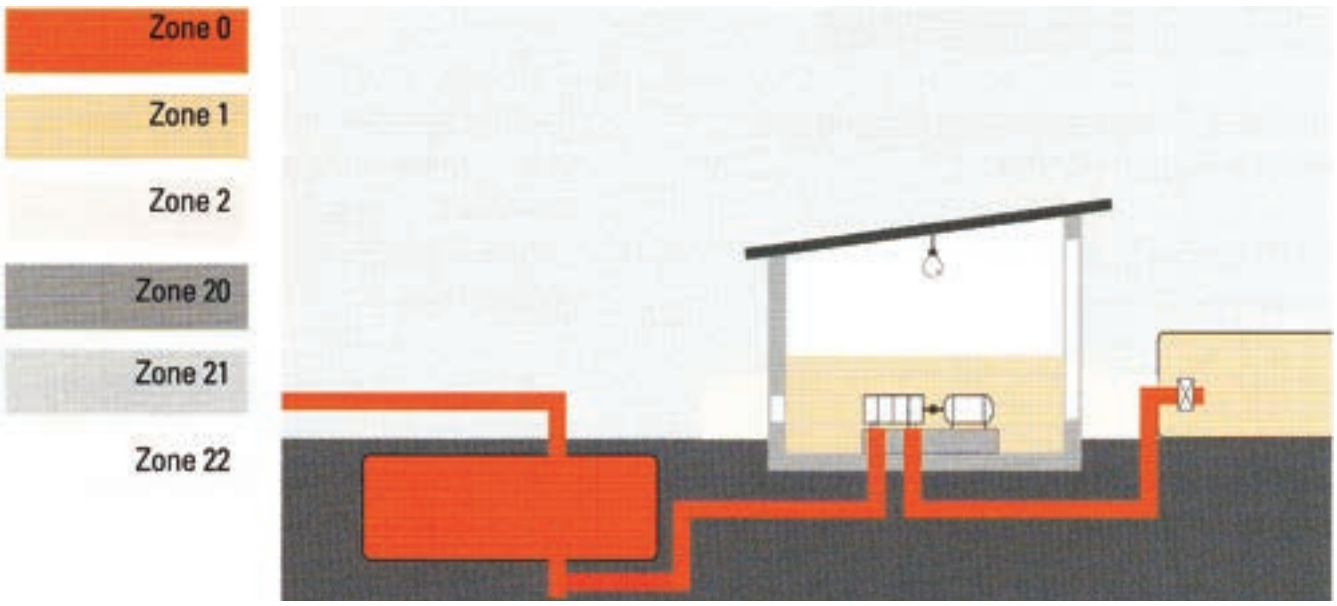

In places of work the potentially explosive atmospheres are normally classified at most as zone 1 and 2 and/or 21 and 22. Zones 0 and 20 are restricted to very small inaccessible areas in work places or are usually restricted to the inside of technical equipment.

Marking

Marking of electrical equipment

	Type of protection	standaed symbol	alternate symbol	Zone	Main application	Standard
	increased safety	e	db	1	terminal and juction boxes. cage induction motors, light fitings.	IEC60079-7 EN 60079-7
	flameproof enclosures	d	db	1	switchgear, control stations, motors	IEC60079-1 EN 60079-1
	pressurized enclosures	px py pz p	pxb pyb pzc pb pc	1 1 2 21 22	switchgear and control cabinets, analysers, large motors	IEC 60079-2 / IEC 6124-4 EN 60079-2 / EN 61241-4
	intrinsic safety	ia ib ic	ia ib ic	0.20 1.21 2	instrumentation technology, fieldbus technology, sensors, actuators	IEC 60079-11 / IEC 61241-11 EN 60079-11 / EN61241-11
	oil immersion	o	ob	1	transformers, starting resistors	IEC 60079-6 EN 60079-6
	powder filling	q	qb	1	sensors, electronic ballasts, electronic devices	IEC 60079-5 EN 60079-5
	encapsulation	ma mb mc	ma mb mc	0.20 0.21 2.22	display units, sensors, electronic devices	IEC 60079-18 / IEC 61241-18 EN 60079-18 / EN 61241-18
	type of protection ,,n”	n_	n_c	2	electrical apparatus for Z0ne2	IEC 60079-15 EN 60079-15
	protection by enclosures	ta_ tb tC	ta tb tC	20 21 22	switchgearand control station, terminal and connection boxes, control boxes, moters, ligt fittings	IEC 60079-31 / IEC 61241-1 EN 60079-31 /EN61241-1

Group

miners		
Group I		Methane
explosive gas afmosphere		
Group II	IIA IIB IIC	Propane Ethylene Hydrogene
explosive gas afmosphere		
Group II	IIIA IIIB IIIC	Combustible flyings Non-comductive dust comductive dust

Tel. +82-51-264-3538 Fax. +82-51-261-9138 www.connec.kr

TECHNICAL INFORMATION

Equipment Groups, Categories and Divisions

Description	Equipment Group ATEX		Equipment Category ATEX	Equipment Protection Level (IEC)	Level of Protection	Presence or Duration of Explosive Atmosphere	G Flammable Gas / Vapour or D Combustible Dust Substances (ATEX)	Correlation with Hazardous Area Zones (ATEX, IEC)	Correlation with Hazar dous Area Zones (ATEX, IEC)
Explanation	I	Underground mines and associated surface installations	M1	Ma	Very High	Constant Risk of Presence	Firedamp / Coal Dust	-	-
			M2	Mb	High				
	II	All other surface installations	1	Ga	Very High	Continuous / Long periods / Frequently	G	Zone 0	Division 1
				Da			D	Zone 20	
			2	Gb	High	Likely to occur	G	Zone 1	Division 1
				Db			D	Zone 21	
			3	Gc	Normal	Unlikely to occur	G	Zone 2	Division 2
				Dc			D	Zone 22	

Classification and Groups

Canada and US (Divisions)					IEC and ATEX (Zones)			
Description	Classification		Apparatus Groups		Description	Equipment Group		
	Canada, US	Flammable (Gas) or Combustable (Dust) Substances	Canada, US	Typical Gas / Dust / Fibers / Flyings		Flammable Gas or Combustable Dust	IEC / ATEX	Typical Gas / Dust / Fibers / Flyings
Explanation	N/A	Gas	N/A	Methane (Gaseous Mines)	Explanation	Gas	Group I	Methane (Gaseous Mines)
	Class I	Gas	Group A	Acetylene		Gas	Group IIC	Acetylene
			Group B	Hydrogen				Hydrogen
			Group C	Ethylene			Group IIB	Ethylene
			Group D	Propane			Group IIA	Propane
	Class II	Dust	Group E	Magnesium		Dust	Group IIIC	Conductive R ≤ 10^3 Ωm
			Group F	Coal			Group IIIB	Non-conductive R > 10^3 Ωm
			Group G	Grain				
	Class III	Fibers / Flyings	N/A	Cotton		Fibers / Flying	Group IIIA	Partical size > 0.5 mm

Apparatus/equipment may be applied only in atmospheres that potentially contain either flammable gas/vapour or combustable dust/fibers/flyings. Apparatus/equipment marked like this is not suitable for use in atmospheres that potentially contains hybrid mixtures of flammable gas/vapour or combustable dust/fibers/flyings

Certificate Number Suffix

Description	Suffix	Description
Explanation	X	Symbol used to denote specific conditions of use specified in the instruction.
	U	Symbol used to denote an Ex component which is not intended to be used alone and requires additional consideration when incorporated into electrical equipment or systems.

Temperature Class and Code

	Zones	Divisions	
Description	Temperature Class Canada, US, IEC, ATEX	Temperature Code Canada,US	Maximum Surface Temperature [°C]
Explanation	T1	T1	450
	T2	T2	300
		T2A	280
		T2B	260
		T2C	230
		T2D	215
	T3	T3	200
		T3A	180
		T3B	165
		T3C	160
	T4	T4	135
		T4A	120
	T5	T5	100
	T6	T6	85

TECHNICAL INFORMATION

IECEx Scheme

IECEx 01	IEC System for Certification to Standards relating to Equipment for use in Explosive Atmospheres (IECEx System) - Basic Rules
IECEx 02	IECEx Certified Equipment Scheme
IECEx 03	IECEx Certified Service Facilities Scheme
IECEx 04	IECEx Conformity Mark Licensing System
IECEx 05	IECEx Certification of Personnel Competencies

NEMA Enclosure Protection, Canada, US

According to NEMA 250

Type	Application	Definition	Comparison with IEC IP code *
1	Indoor	Protection against falling dirt	IP10
2	Indoor	Protection against falling dirt	IP11
3	Indoor/Outdoor	Protection against falling dirt; rain, sleet, snow, windblown dust and external formation of ice	IP54
3R	Indoor/Outdoor	Protection against falling dirt; rain, sleet, snow and external formation of ice	IP14
3S	Indoor/Outdoor	Protection against falling dirt; rain, sleet, snow, windblown dust and in which the external mechanisms remain operable when ice laden	IP54
4	Indoor/Outdoor	Protection against falling dirt; rain, sleet, snow, windblown dust, splashing water and hose-directed water and that will be undamaged by the external formation of ice on the enclosure	IP56
4X	Indoor/Outdoor	Protection against falling dirt; rain, sleet, snow, windblown dust, splashing water, hose-directed water and corrosion that will be undamaged by the external formation of ice on the enclosure	IP56
5	Indoor	Protection against falling dirt; settling airborne dust, lint, fibers, flyings, dripping and light splashing of liquids	IP52
6	Indoor/Outdoor	Protection against falling dirt; hose-directed water and temporary submersion at a limited depth and that will be undamaged by the external formation of ice on the enclosure	IP67
6P	Indoor/Outdoor	Protection against falling dirt; hose-directed water and prolonged submersion at a limited depth and that will be undamaged by the external formation of ice on the enclosure	IP67
7	Indoor	For use in hazardous locations classified as Class I Division 1 Groups ABCD	-
8	Indoor/Outdoor	For use in hazardous locations classified as Class I Division 1 Groups ABCD	-
9	Indoor	For use in hazardous locations classified as Class II Division 1 Groups EFG	-
10	Indoor	Constructed to meet the requirements of the Mine Safety and Health Administration (MSHA), 30 CFR, part 18	-
12	Indoor	Enclosures w/o knockouts that provide protection against falling dirt; circulating dust, lint, fibers and flyings; and against dripping and light splashing of liquids	IP52
12K	Indoor	Enclosures with knockouts that provide protection against falling dirt; circulating dust, lint, fibers and flyings; and against dripping and light splashing of liquids	IP52
13	Indoor	Protection against falling dirt; circulating dust, lint, fibers and flyings; and against the spraying, splashing and seepage of water, oil, and non-corrosive coolants	IP54

* Conversion only possible from NEMA to IEC IP code, not the other way around

Tel. +82-51-264-3538 Fax. +82-51-261-9138 www.connec.kr

TECHNICAL INFORMATION

Standards for Non-Electrical Equipment used in Potentially Explosive Atmospheres

Flammable / Combustable Substance	Flammable / Combustable Substance		European Standard	
			Zone	CEN
Gas, Vapour, Mists and Dust	-	Basic methodology and requirements	0 / 1 / 2 / 20 / 21 / 22	EN 13463-1
	fr	Flow restricting enclosure		EN 13463-2
	d	Flameproof enclosure		EN 13463-3
	c	Constructional safety		EN 13463-5
	b	Control of ignition source		EN 13463-6
	k	Liquid immersion		EN 13463-8

* Currently only the European ATEX directive specifies requirements for non-electrical equipment, which are covered by the above mentioned series of CEN standards

Degrees of Protection provided by enclosures (IP code)

According to EN/IEC 60529

First Characteristic Numeral: protection against ingress of solid foreign objects		Second Characteristic Numeral: protection against ingress of water with harmful effects	
No protection	0	0	No protection
Objects ≥ 50 mm	1	1	Vertically Dripping
Objects ≥ 12.5 mm	2	2	Dripping (15° tilted)
Objects ≥ 2.5 mm	3	3	Spraying
Objects ≥ 1 mm	4	4	Splashing
Dust-Protected	5*	5	Jetting
Dust-Tight	6	6	Powerful Jetting
		7	Temporary Immersion
		8	Continuous Immersion

* According to EN/IEC 60079-0, the IP 5x test shall be conducted with maximum 2 kPa underpressure since the enclosure shall be considered as a Category 1 enclosure as specified in EN/IEC 60529

TECHNICAL INFORMATION

THREAD - ISO / PG / NPT / PT /PF

ISO Standard(METRIC Thread)

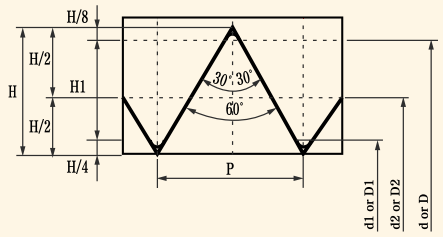

H= 0.866025P d2=d-0.649519P

H= 0.541266P d2=d-1.082532P

D= d D2=d2 D1=d1

KS B 0204-86 JIS B 0207-1982

Unit : mm

Nominal size	Pitch P	Diameter D	Effective diameter d2	Diameter at root d1
M16	1.5	16	15.026	14.376
M20	1.5	20	19.026	18.376
M24	1.5	24	23.026	22.376
M25	1.5	25	24.026	23.376
M30	1.5	30	29.026	28.376
M32	1.5	32	31.026	30.376
M40	1.5	40	39.026	38.376
M45	1.5	45	44.026	43.376
M50	1.5	50	49.026	48.376
M56	1.5	56	55.026	54.376
M63	1.5	63	62.026	61.376
M72	1.5	72	71.026	70.376
	2.0	72	70.701	69.835
M75	1.5	75	74.026	73.376
	2.0	75	73.701	72.835
M90	2.0	90	88.701	87.835
M100	2.0	100	98.701	97.835

PG Thread(German pipe thread)

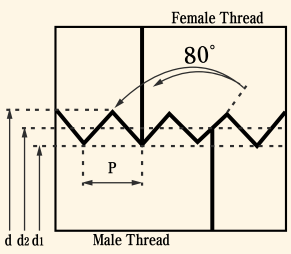

DIN 40430

Unit : mm

Nominal size	Number size threads per inch n	Pitch P (Ref.)	Height of contiguos surface H1	Male thread O.D d	Male thread Effective diameter d2	Male thread Diameter at root d1	Minimum diameter of mounting hole in box
				Female thread Diameter at root D	Female thread Effective diameter D2	Female thread O.D D1	
PG7	20	1.270	0.61	12.5	11.89	11.28	13
PG9	18	1.411	0.67	15.2	14.53	13.86	16
PG11	18	1.411	0.67	18.6	17.93	17.36	19
PG13.5	18	1.411	0.67	20.4	19.73	19.06	21
PG16	18	1.411	0.67	22.5	21.83	21.16	23
PG21	16	1.588	0.76	28.3	27.54	26.78	29
PG29	16	1.588	0.76	37	36.24	35.48	38
PG36	16	1.588	0.76	47	46.24	45.48	48
PG42	16	1.588	0.76	54	53.24	52.48	55
PG48	16	1.588	0.76	59.3	58.54	57.78	60

NPT Thread(American taper thread)

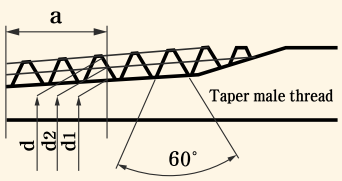

ANSI / ASME B1.20.1

Unit : mm

Nominal size	Thread Number of threads per inch	Thread Pitch P	Thread Depth of thread h	Basic diameters Length a	Basic diameters O.D d	Basic diameters Effective dismeter d2	Basic diameters Diameter at root d1
NPT 1/2"	14	1.814	1.451	8.128	21.223	19.772	18.321
NPT 3/4"	14	1.814	1.451	8.61	25.117	23.666	20.764
NPT 1"	11.5	2.208	1.766	10.16	33.227	31.461	29.695
NPT 1-1/4"	11.5	2.208	1.766	10.668	41.983	40.217	38.451
NPT 1-1/2"	11.5	2.208	1.766	10.668	48.053	46.287	44.521
NPT 2"	11.5	2.208	1.766	11.074	60.091	58.325	56.55
NPT 2-1/2"	8	3.175	2.54	17.322	72.698	70.158	67.61
NPT 3"	8	3.175	2.54	19.456	88.607	86.067	83.52
NPT 3-1/2"	8	3.175	2.54	20.853	101.6	98.776	97.473
NPT 4"	8	3.175	2.54	21.437	113.972	111.432	108.892

PT Thread(Pipe Taper thread)

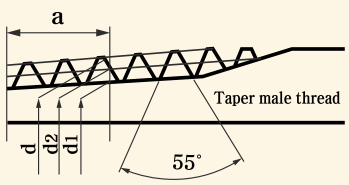

JIS B0203

Unit : mm

Nominal size	Thread Number of threads per inch	Thread Pitch P	Thread Depth of thread h	Basic diameters Length a	Basic diameters O.D d	Basic diameters Effective dismeter d2	Basic diameters Diameter at root d1
PT 1/2"	14	1.814	1.162	8.16	20.955	19.793	18.631
PT 3/4"	14	1.814	1.162	9.53	26.441	25.279	24.117
PT 1"	11	2.309	1.479	10.39	33.249	31.77	30.291
PT 1-1/4"	11	2.309	1.479	12.70	41.91	40.431	38.952
PT 1-1/2"	11	2.309	1.479	12.70	47.803	46.324	44.845
PT 2"	11	2.309	1.479	15.88	59.614	58.135	56.656
PT 2-1/2"	11	2.309	1.479	17.46	75.184	73.705	72.226
PT 3"	11	2.309	1.479	20.64	87.884	86.405	84.926
PT 3-1/2"	11	2.309	1.479	22.23	100.330	98.851	97.372
PT 4"	11	2.309	1.479	25.40	113.03	111.551	110.072

PF Thread(Pipe straight thread)

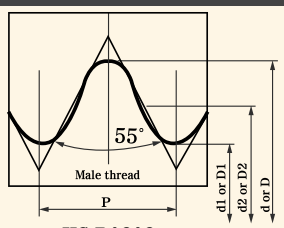

JIS B0202

Unit : mm

Nominal size	Number of threads per inch	Pitch F (Ref.)	Depth of thread h	Crest/root radius r	Male thread O.D d	Male thread Effective dismeter d2	Male thread diameter at root d1
					Female thread diameter at root D	Female thread Effective dismeter D2	Female thread I.D D1
PF 1/2"	14	1.8143	1.162	0.25	20.955	19.793	18.631
PF 3/4"	14	1.8143	1.162	0.25	26.441	25.279	24.117
PF 1"	11	2.3091	1.479	0.32	33.249	31.77	30.291
PF 1-1/4"	11	2.3091	1.479	0.32	41.91	40.431	38.952
PF 1-1/2"	11	2.3091	1.479	0.32	47.803	46.324	44.845
PF 2"	11	2.3091	1.479	0.32	59.614	58.135	56.656
PF 2-1/2"	11	2.3091	1.479	0.32	75.184	73.705	72.226
PF 3"	11	2.3091	1.479	0.32	87.884	86.405	84.926
PF 3-1/2"	11	2.3091	1.479	0.32	100.330	98.851	97.372
PF 4"	11	2.3091	1.479	0.32	113.030	111.551	110.072

Tel. +82-51-264-3538 Fax. +82-51-261-9138 www.connec.kr



EX & NORMAL CABLE GLAND
FITTING & ACCESSORY
JUNCTION BOX

Your best business partner !
Quality management & Technology innovation !

CONNEC CABLE GLAND

CONNEC (주)콘넥 CO.,LTD.

부산광역시 사하구 신산로13번길 58 ㉮49432
Tel. 051-264-3538 / Fax. 051-261-9138

58, Sinsan-ro 13beon-gil, Saha-gu, Busan, Korea
Tel. +82-51-264-3538 Fax. +82-51-261-9138
e-mail : cn3538@naver.com
www.connec.kr

Local Agency
화성기전 Hwasung Electric.co
울산광역시 진장 18길 44-10 우:44248
Tel. 052-289-0664 / Fax. 052-289-0665

44-10, Jinjang, 18-gil, Buk-gu, Ulsan, Korea
Tel. +82-52-289-0664 Fax. +82-52-289-0665



CONNEC CO.,LTD. (주)콘넥